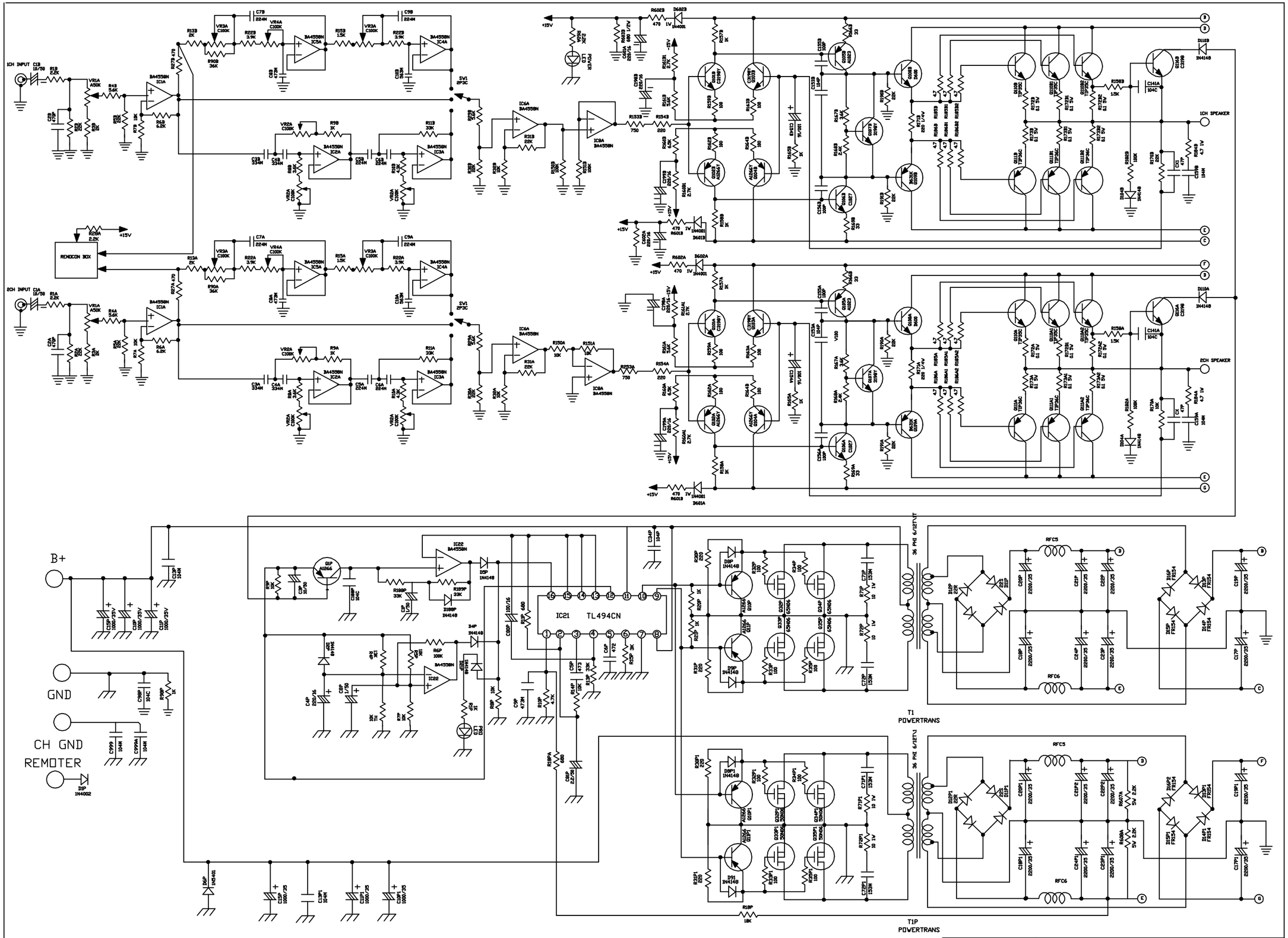

MODEL	SCHEMATIC DIAGRAM		
EA 275HCCA	DRAWN	DESIGNED	APPROVED