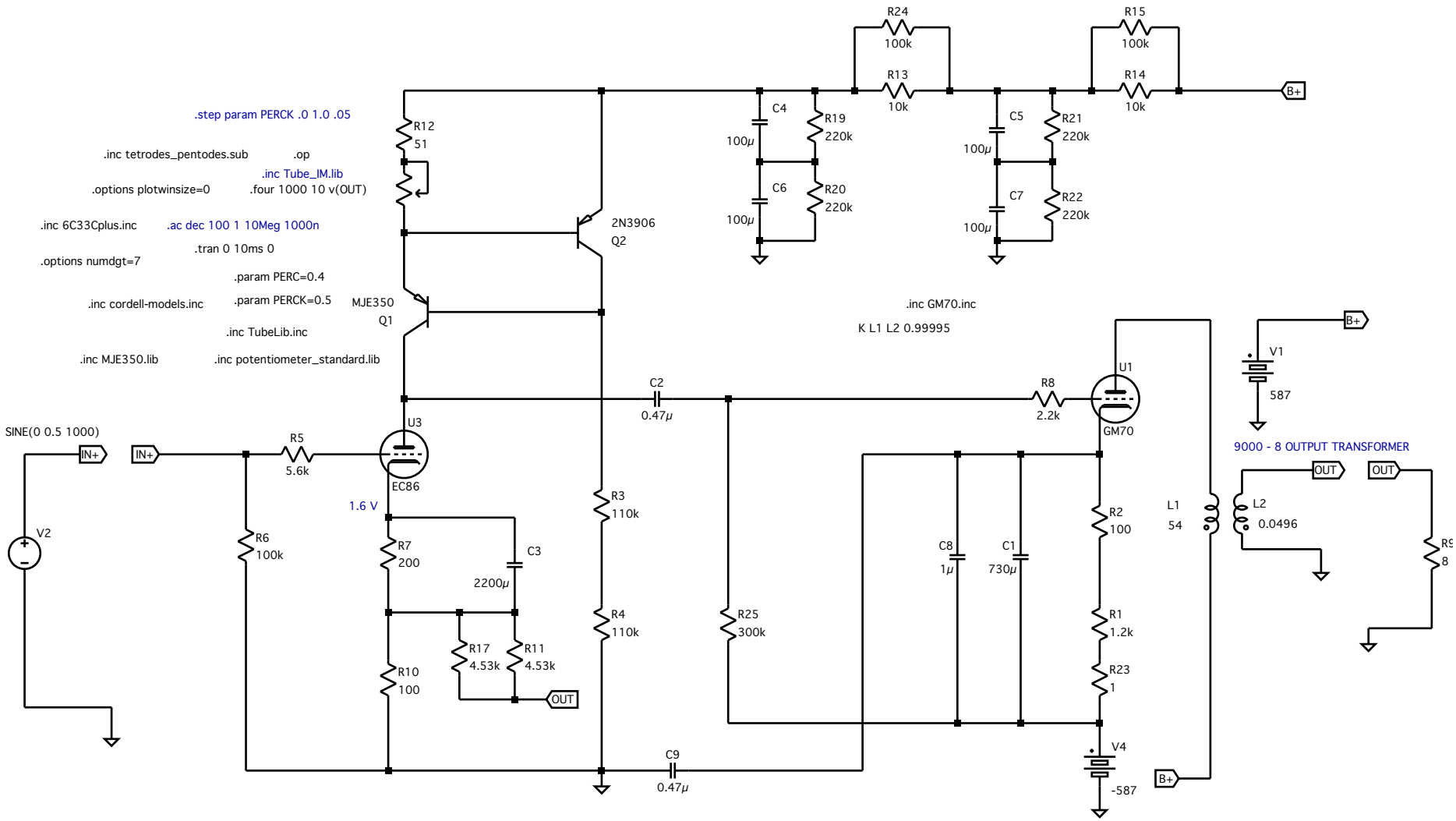
.step param PERCK .0 1.0 .05
.inc tetrodes_pentodes.sub
.op
.inc Tube_IM.lib
.options plotwinsize=0
.four 1000 10 v(OUT)
.inc 6C33Cplus.inc
.ac dec 100 1 10Meg 1000n
.tran 0 10ms 0
.options numdgt=7
.param PERC=0.4
.inc cordell-models.inc
.param PERCK=0.5
.inc TubeLib.inc
.inc MJE350.lib
.inc potentiometer_standard.lib
.inc GM70.inc
K L1 L2 0.99995
9000 - 8 OUTPUT TRANSFORMER
SINE(0 0.5 1000)
IN+
OUT
B+
R12
51
MJE350
Q1
2N3906
Q2
R24
100k
R13
10k
R15
100k
R14
10k
C4
100µ
R19
220k
C6
100µ
R20
220k
C5
100µ
R21
220k
C7
100µ
R22
220k
U3
EC86
1.6 V
R5
5.6k
R6
100k
R7
200
C3
2200µ
R17
4.53k
R11
4.53k
R10
100
R3
110k
R4
110k
C2
0.47µ
C9
0.47µ
R25
300k
R8
2.2k
U1
GM70
C8
1µ
C1
730µ
R2
100
R1
1.2k
R23
1
V1
587
V4
-587
L1
54
L2
0.0496
V2
R9
8