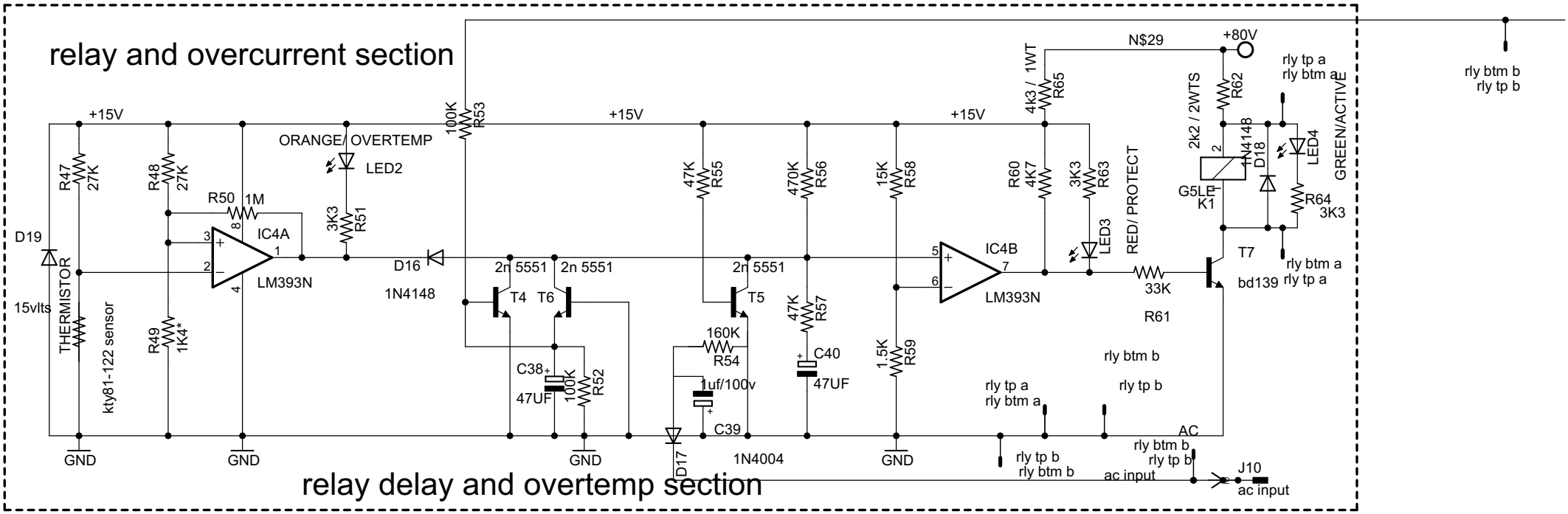
relay and overcurrent section
relay delay and overtemp section
+15V
+15V
+15V
+80V
N$29
R47 27K
R48 27K
R50 1M
IC4A
LM393N
D19
15vlts
THERMISTOR
kty81-122 sensor
R49 1K4*
ORANGE/ OVERTEMP
LED2
3K3 R51
100K R53
D16
1N4148
2n 5551
T4
2n 5551
T6
C38
47UF
100K R52
47K R55
470K R56
47K R57
C40
47UF
160K R54
1uf/100v
C39
D17
1N4004
2n 5551
T5
15K R58
1.5K R59
IC4B
LM393N
R60 4K7
3K3 R63
LED3
RED/ PROTECT
4k3 / 1WT R65
33K
R61
2k2 / 2WTS R62
1N4148 D18
G5LE-1 K1
T7
bd139
LED4
R64 3K3
GREEN/ACTIVE
rly tp a
rly btm a
rly btm b
rly tp b
AC
ac input
J10
ac input
GND
GND
GND
GND