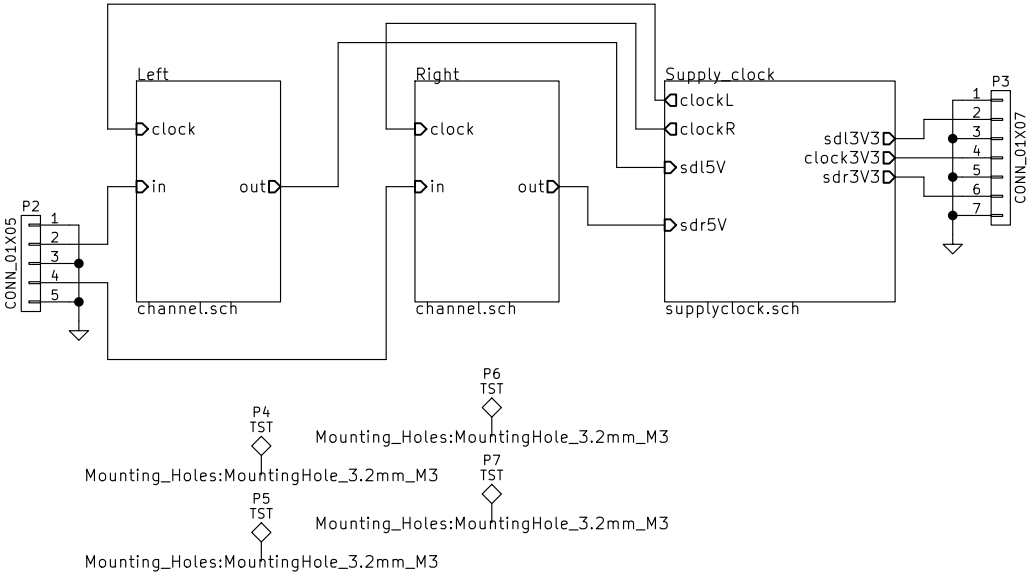
Left
clock
in
out
channel.sch
Right
clock
in
out
channel.sch
Supply_clock
clockL
clockR
sdl5V
sdr5V
sdl3V3
clock3V3
sdr3V3
supplyclock.sch
P2
CONN_01X05
1
2
3
4
5
P3
CONN_01X07
1
2
3
4
5
6
7
P4
TST
Mounting_Holes:MountingHole_3.2mm_M3
P5
TST
Mounting_Holes:MountingHole_3.2mm_M3
P6
TST
Mounting_Holes:MountingHole_3.2mm_M3
P7
TST
Mounting_Holes:MountingHole_3.2mm_M3

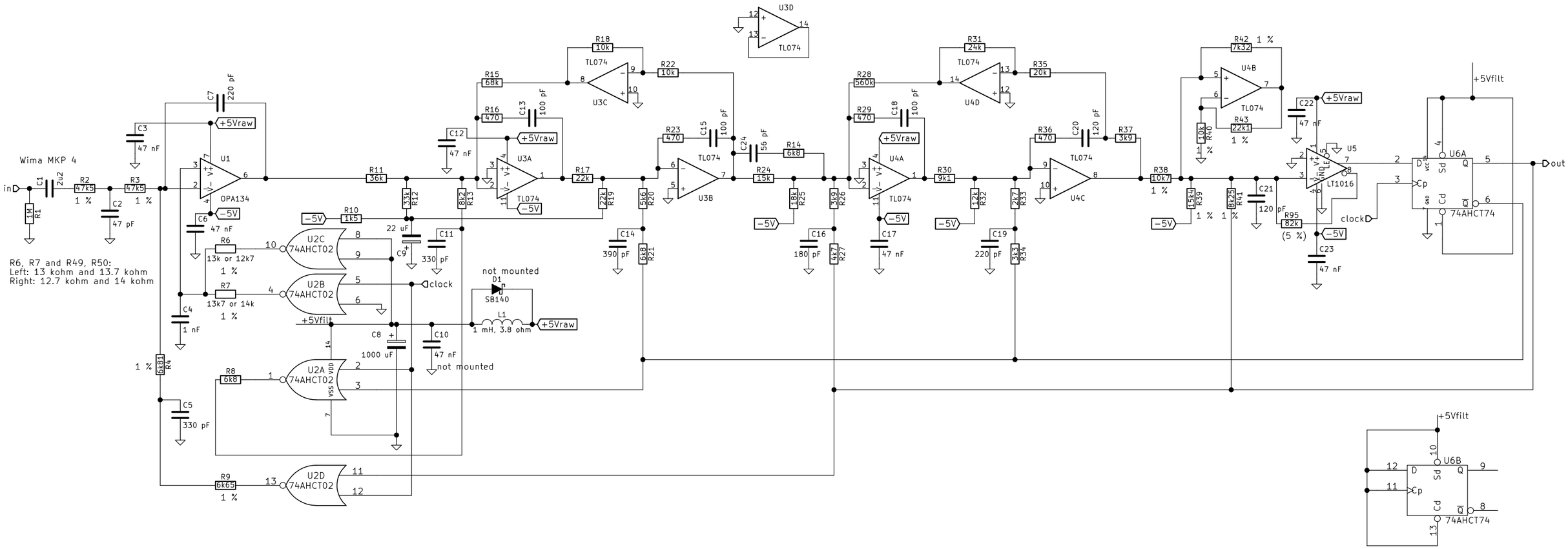
Wima MKP 4
in
C1 2u2
R1 1M
R2 47k5 1 %
R3 47k5 1 %
C2 47 pF
C3 47 nF
C4 1 nF
C5 330 pF
C6 47 nF
C7 220 pF
R4 6k81 1 %
R6, R7 and R49, R50:
Left: 13 kohm and 13.7 kohm
Right: 12.7 kohm and 14 kohm
R6 13k or 12k7 1 %
R7 13k7 or 14k 1 %
R8 6k8
R9 6k65 1 %
R10 1k5
U1 OPA134
+5Vraw
-5V
+5Vfilt
U2A 74AHCT02
U2B 74AHCT02
U2C 74AHCT02
U2D 74AHCT02
clock
C8 1000 uF
C9 22 uF
C10 47 nF
not mounted
C11 330 pF
C12 47 nF
R11 36k
R12 33k
R13 8k2
R14 6k8
R15 68k
R16 470
R17 22k
R18 10k
R19 22k
R20 5k6
R21 6k8
R22 10k
R23 470
R24 15k
R25 18k
R26 3k9
R27 4k7
R28 560k
R29 470
R30 9k1
R31 24k
R32 12k
R33 2k7
R34 3k3
R35 20k
R36 470
R37 3k9
R38 10k7 1 %
R39 15k4 1 %
R40 10k 1 %
R41 6k25 1 %
R42 7k32 1 %
R43 22k1 1 %
R95 82k (5 %)
C13 100 pF
C14 390 pF
C15 100 pF
C16 180 pF
C17 47 nF
C18 100 pF
C19 220 pF
C20 120 pF
C21 120 pF
C22 47 nF
C23 47 nF
C24 56 pF
D1 SB140
L1 1 mH, 3.8 ohm
U3A TL074
U3B TL074
U3C TL074
U3D TL074
U4A TL074
U4B TL074
U4C TL074
U4D TL074
U5 LT1016
U6A 74AHCT74
U6B 74AHCT74
out

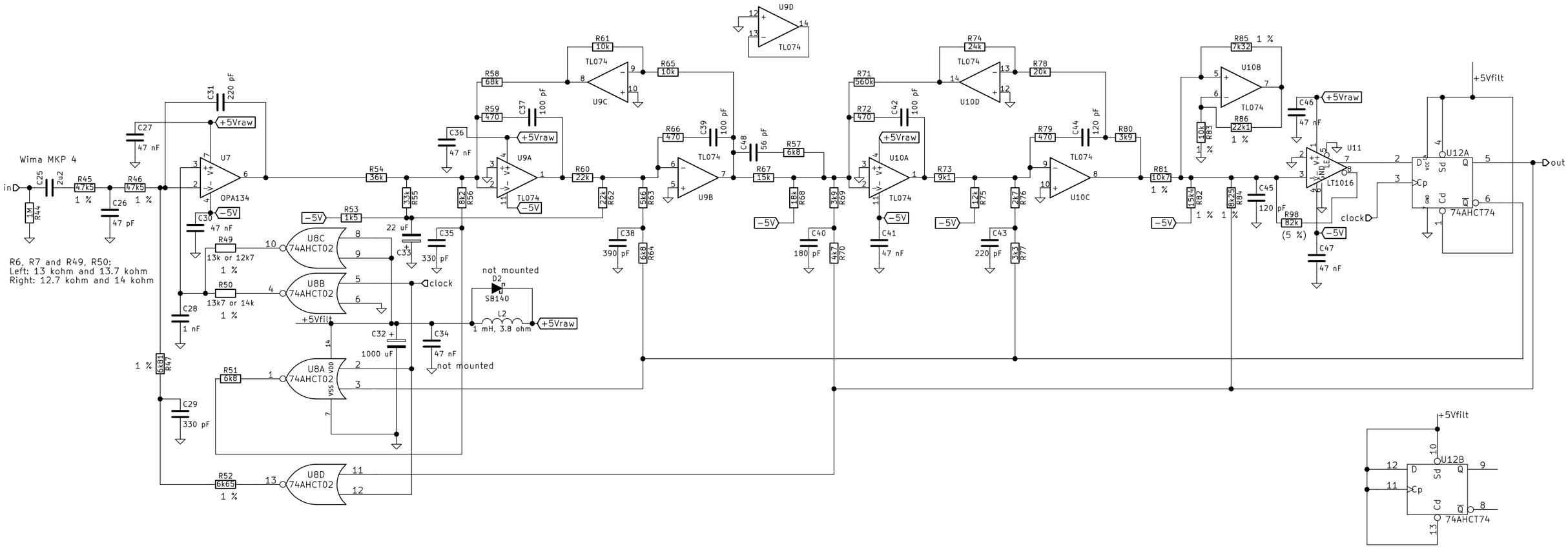

R6, R7 and R49, R50:
Left: 13 kohm and 13.7 kohm
Right: 12.7 kohm and 14 kohm

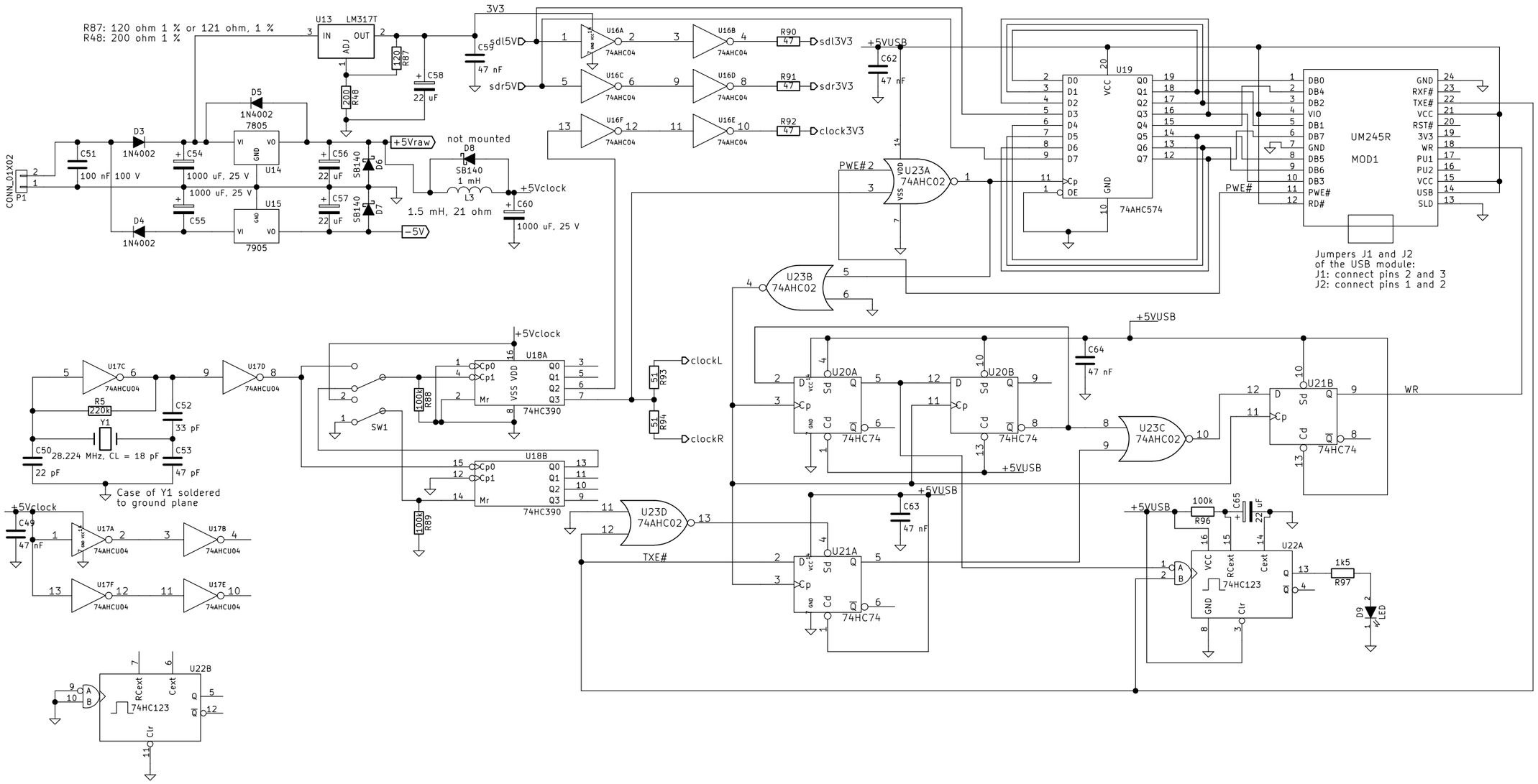
R87: 120 ohm 1 % or 121 ohm, 1 %
R48: 200 ohm 1 %
U13 LM317T
IN OUT ADJ
R87 120
R48 200
C58 22 uF
3V3
C59 47 nF
sdl5V
sdr5V
U16A U16B U16C U16D U16E U16F 74AHC04
R90 47 sdl3V3
R91 47 sdr3V3
R92 47 clock3V3
+5VUSB
C62 47 nF
U19 74AHC574
UM245R MOD1
Jumpers J1 and J2
of the USB module:
J1: connect pins 2 and 3
J2: connect pins 1 and 2
PWE#2
U23A 74AHC02
PWE#
U23B 74AHC02
CONN_01X02 P1
C51 100 nF 100 V
D3 1N4002
D4 1N4002
C54 1000 uF, 25 V
C55 1000 uF, 25 V
D5 1N4002
U14 7805
U15 7905
C56 22 uF
C57 22 uF
SB140 D6
SB140 D7
+5Vraw
-5V
not mounted
D8 SB140
L3 1 mH
1.5 mH, 21 ohm
+5Vclock
C60 1000 uF, 25 V
U17C U17D U17A U17B U17F U17E 74AHCU04
R5 220k
Y1 28.224 MHz, CL = 18 pF
C50 22 pF
C52 33 pF
C53 47 pF
Case of Y1 soldered
to ground plane
C49 47 nF
U18A U18B 74HC390
R88 100k
R89 100k
SW1
R93 51 clockL
R94 51 clockR
U20A U20B U21A U21B 74HC74
C64 47 nF
C63 47 nF
U23C 74AHC02
U23D 74AHC02
TXE#
WR
R96 100k
C65 22 uF
U22A 74HC123
R97 1k5
D9 LED
U22B 74HC123