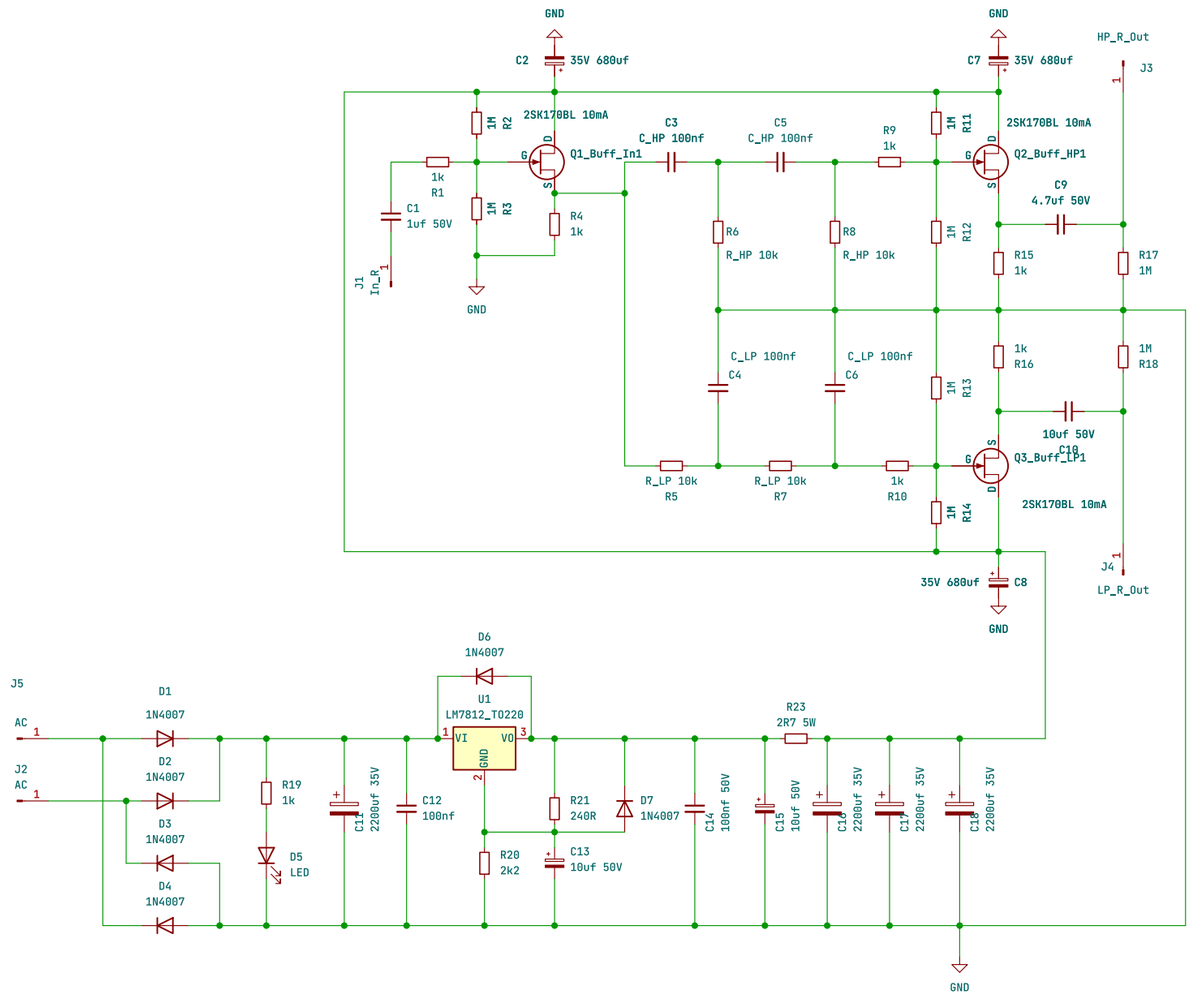

Rf=1/(6.28*f*C)

If C= 0.1uF and crossover frequency = 150Hz:

R = 1/ (2 x Pi x frequency x C)
= 1 / (6.28 x 150 x 0.0000001 F)
= 1 / (942 x 0.0000001)
= 1 / 0,0000942
= 10.616 Ohm
= 10kOhm

https://www.digikey.de/en/resources/conversion-calculators/conversion-calculator-low-pass-and-high-pass-filter

https://www.v-cap.com/coupling-capacitor-calculator.php

André Eikmeyer

Sheet: /
File: DIY Jfet buffered Xover.kicad_sch

Title: Jfet buffered xover

Size: A3	Date:	Rev:
KiCad E.D.A. kicad 7.0.7		Id: 1/1