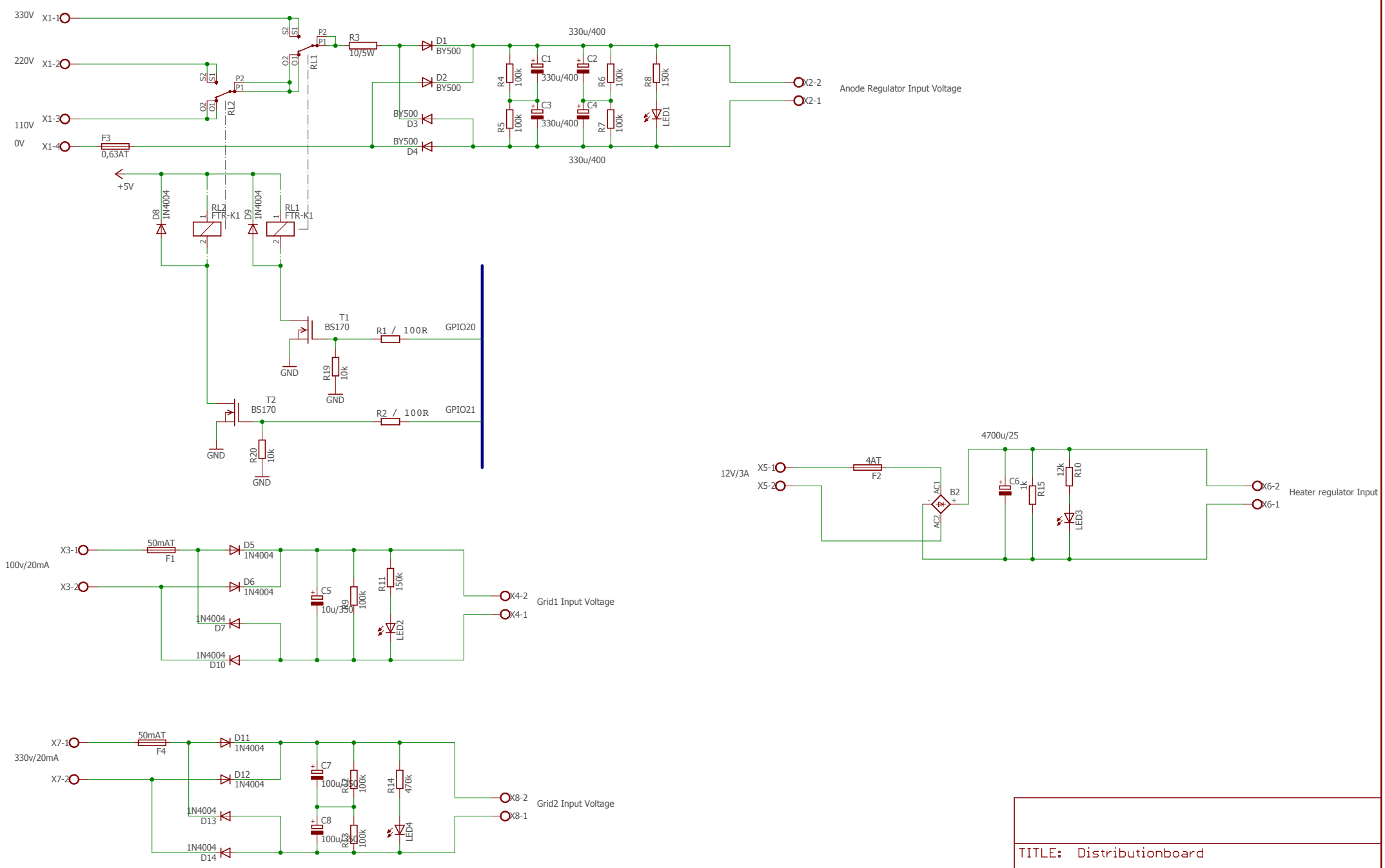

TITLE: Distributionboard	
Document Number:	REV:
Date: 29.11.2017 11:54	Sheet: 1/2

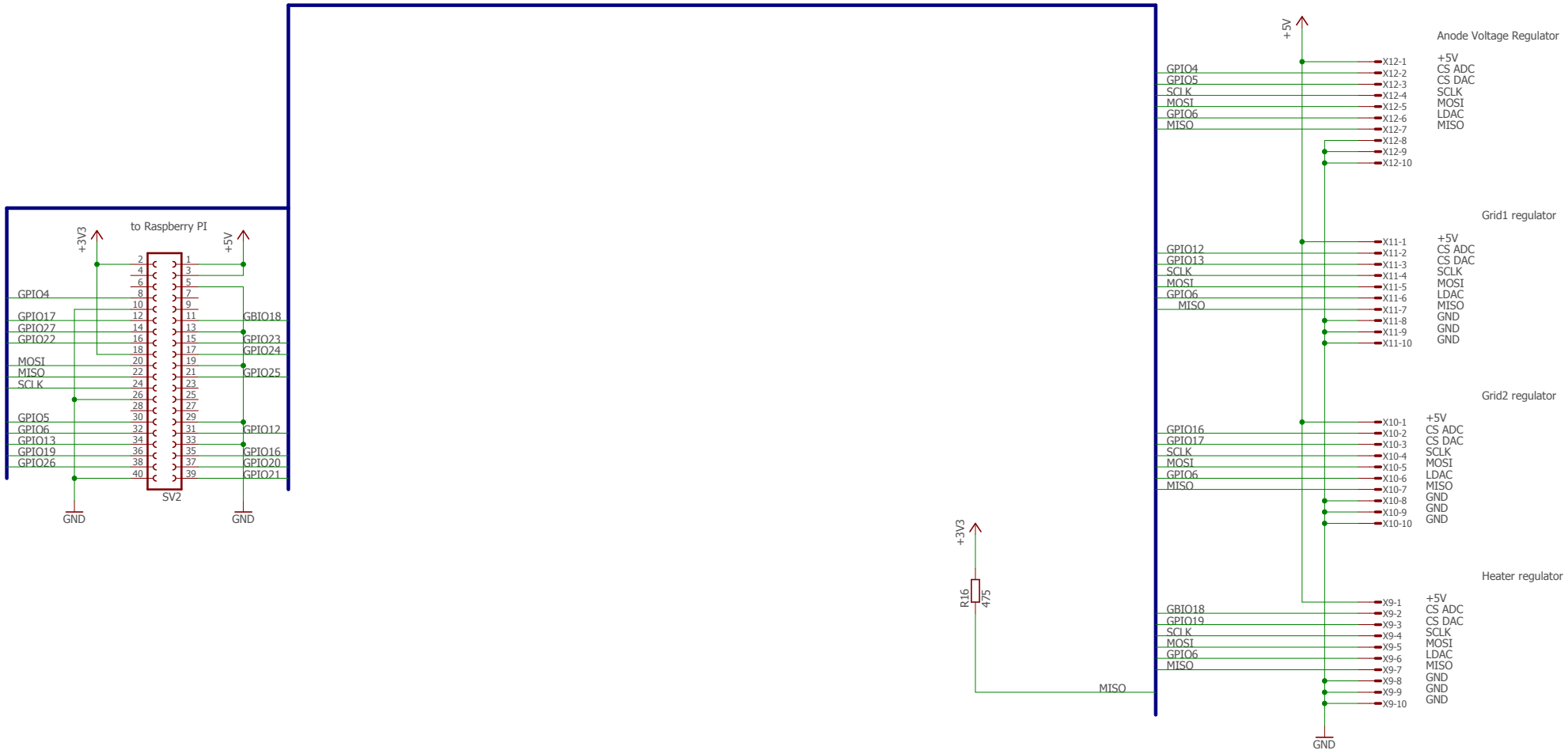

TITLE: Distributionboard	
Document Number:	REV:
Date: 29.11.2017 11:54	Sheet: 2/2