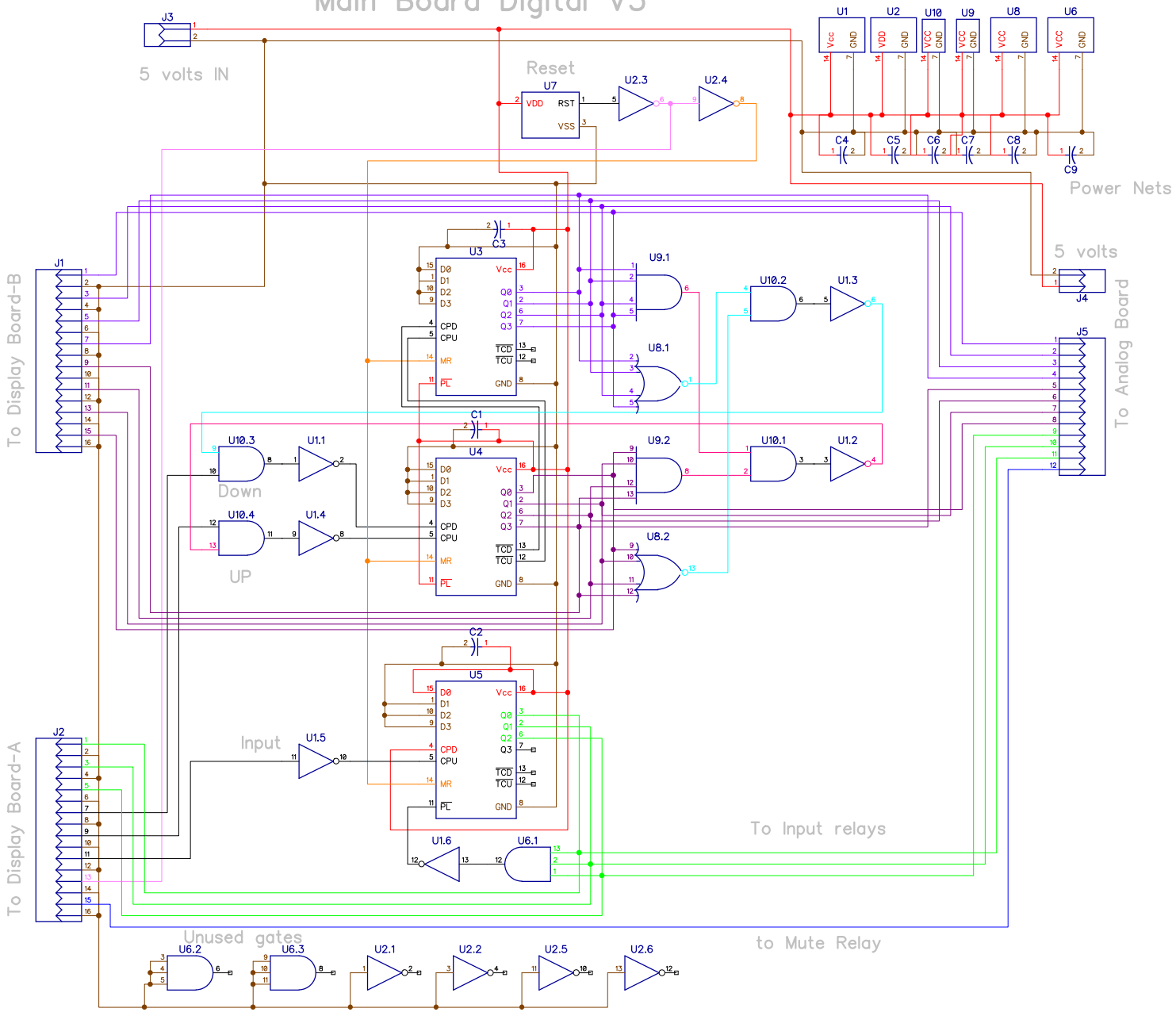Main Board Digital V3