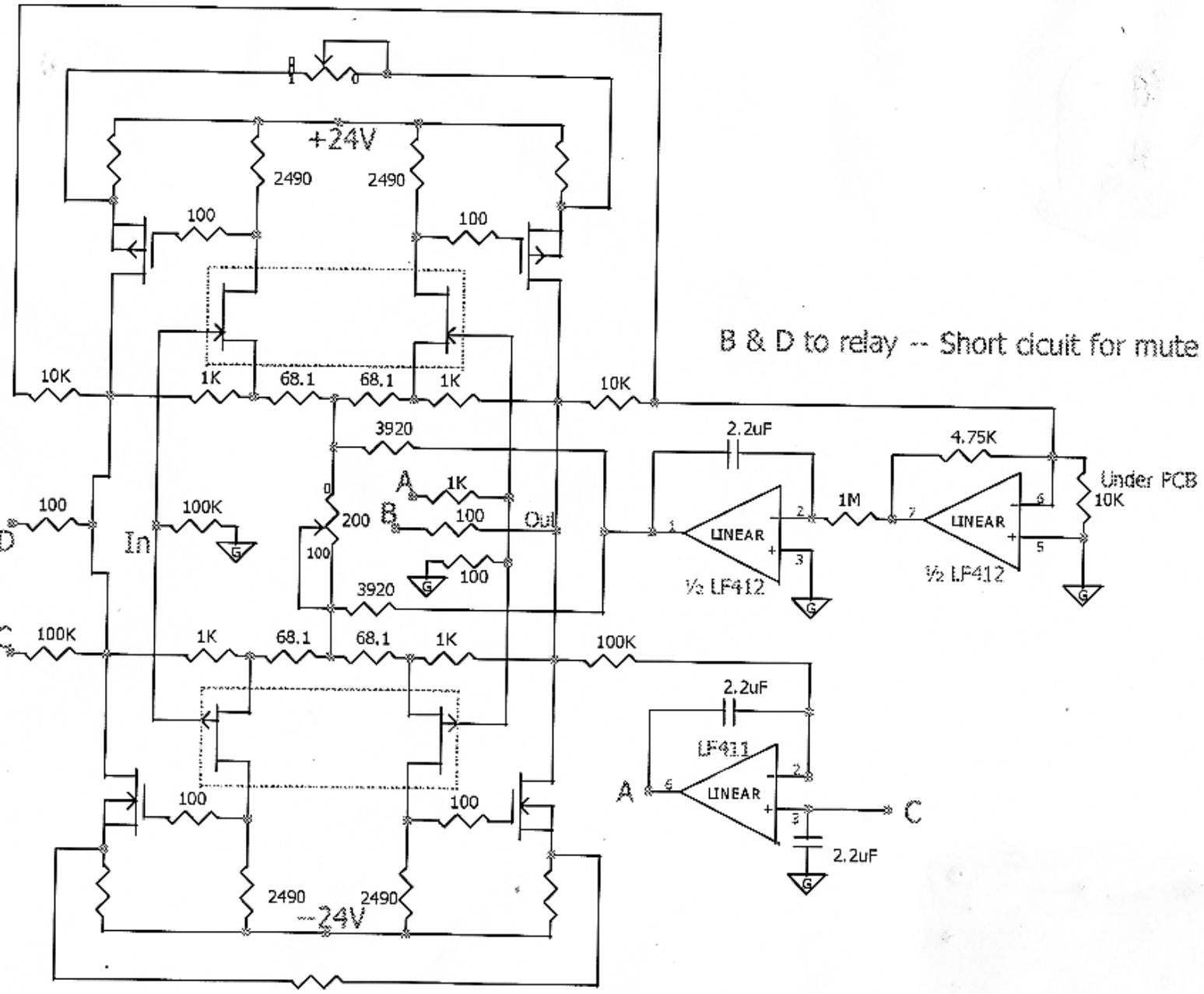

B & D to relay -- Short cicuit for mute
+24V
2490
2490
100
100
10K
1K
68.1
68.1
1K
10K
3920
2.2uF
4.75K
Under PCB
10K
A
1K
B
100
Out
200
100
100
100K
In
100
D
100
3920
1M
LINEAR
½ LF412
LINEAR
½ LF412
100K
1K
68.1
68.1
1K
100K
2.2uF
LF411
A
LINEAR
C
2.2uF
100
100
2490
2490
-24V