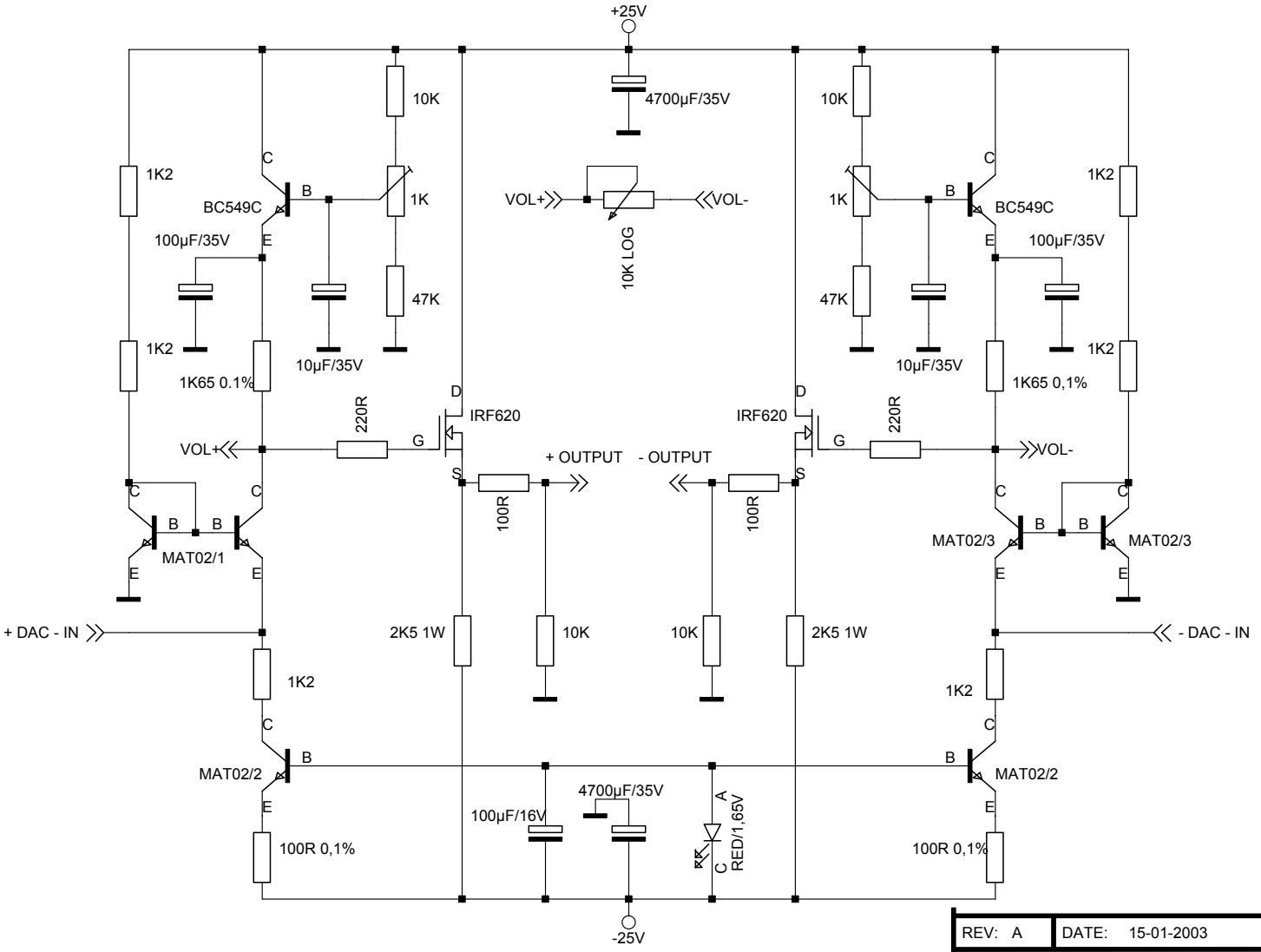

REV: A	DATE: 15-01-2003	ENG: U. C. TRINKS
PROJECT: DAC-OUT		
COMPANY: ADDRESS: ~~KEINERGASSE 8~~ CITY : VIENNA COUNTRY: AUSTRIA		
INITIAL DATE: 01-01-2002	PAGE: 1	OF: 1