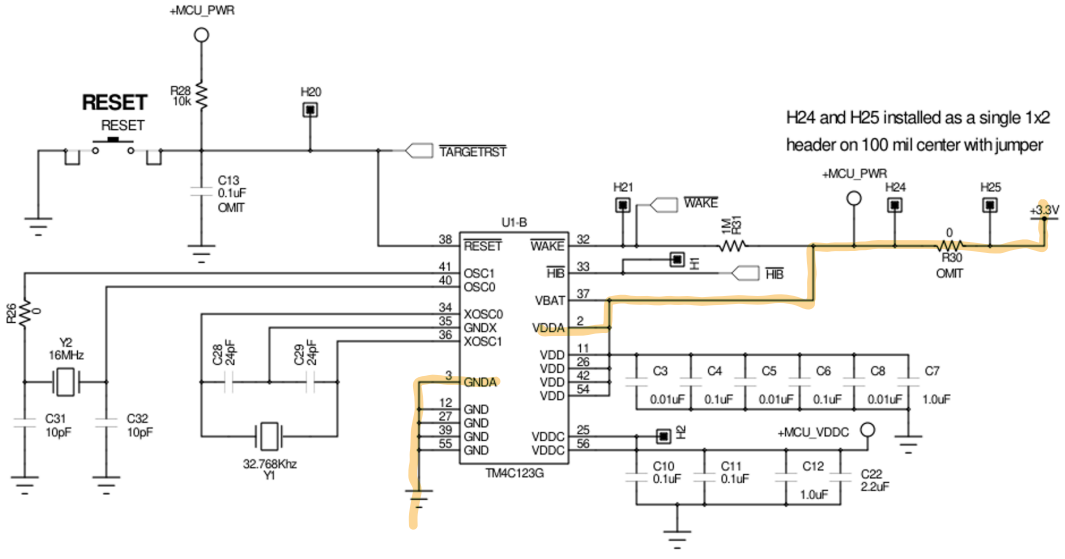

d. Internal reference is connected directly between V_{DDA} and GNDA (VREFi = V_{DDA} - GNDA). In this mode, E_O, E_G, E_T, and dynamic specifications are adversely affected due to internal voltage drop and noise on V_{DDA} and GNDA.