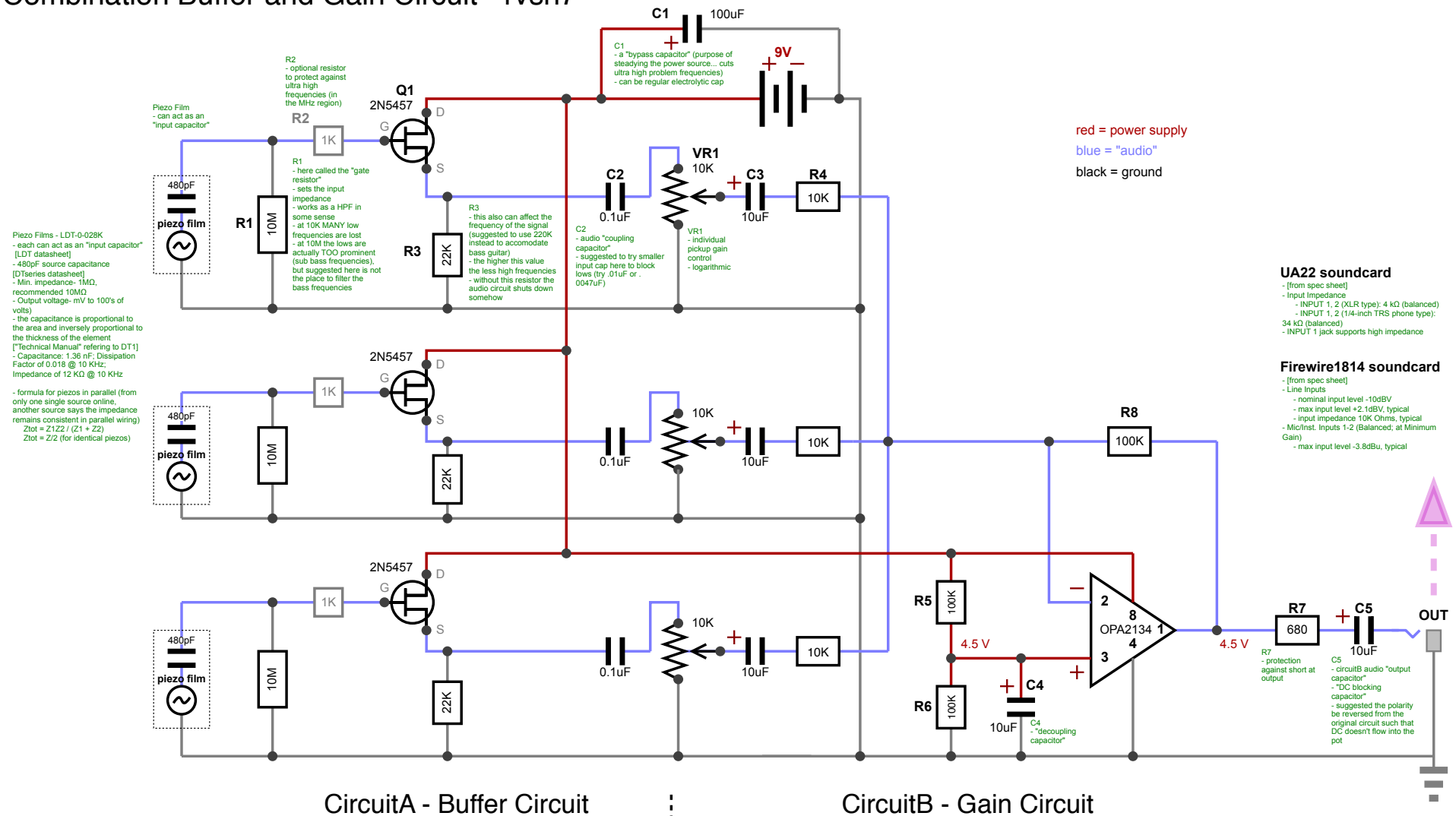Combination Buffer and Gain Circuit - rvsn7