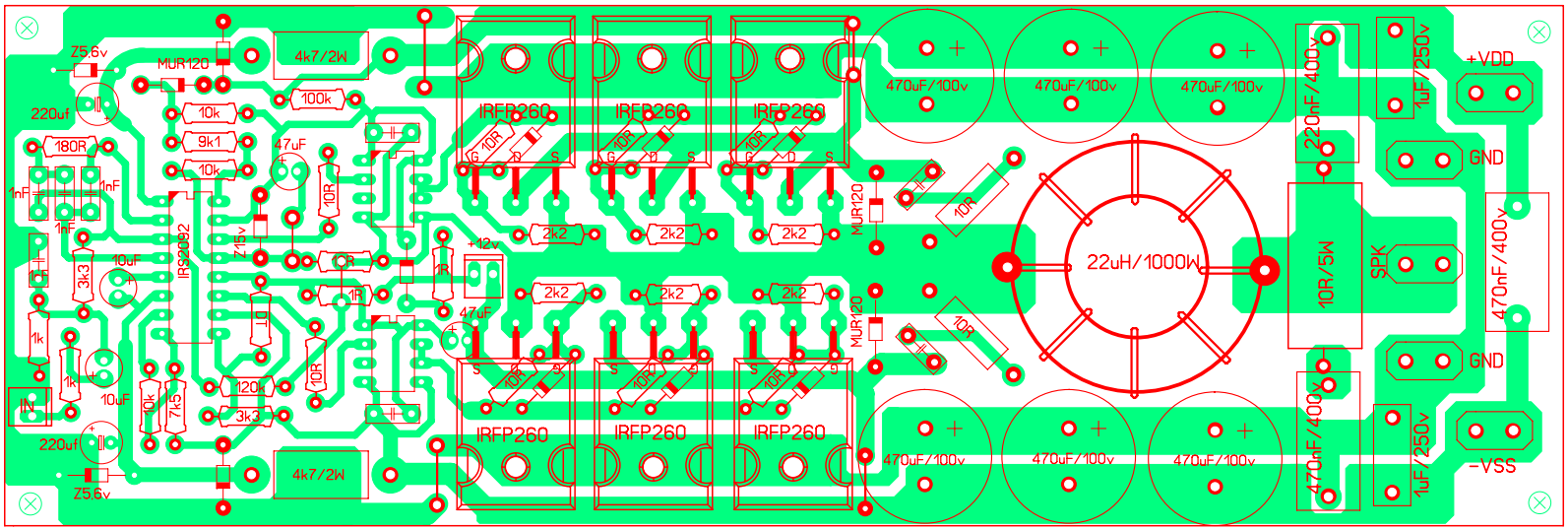

Z5.6v
MUR120
4k7/2W
220uf
180R
10k
9k1
10k
100k
47uF
10R
1nF
1nF
1nF
IRS2092
Z15v
10uF
3k3
1k
1k
10uF
10k
7k5
120k
3k3
10R
IN
220uf
Z5.6v
4k7/2W
IRFP260
IRFP260
IRFP260
10R
2k2
2k2
2k2
2k2
2k2
2k2
+12v
47uF
IRFP260
IRFP260
IRFP260
MUR120
MUR120
10R
10R
470uF/100v
470uF/100v
470uF/100v
470uF/100v
470uF/100v
470uF/100v
22uH/1000W
220nF/400v
1uF/250v
+VDD
GND
10R/5W
SPK
470nF/400v
GND
470nF/400v
1uF/250v
-VSS