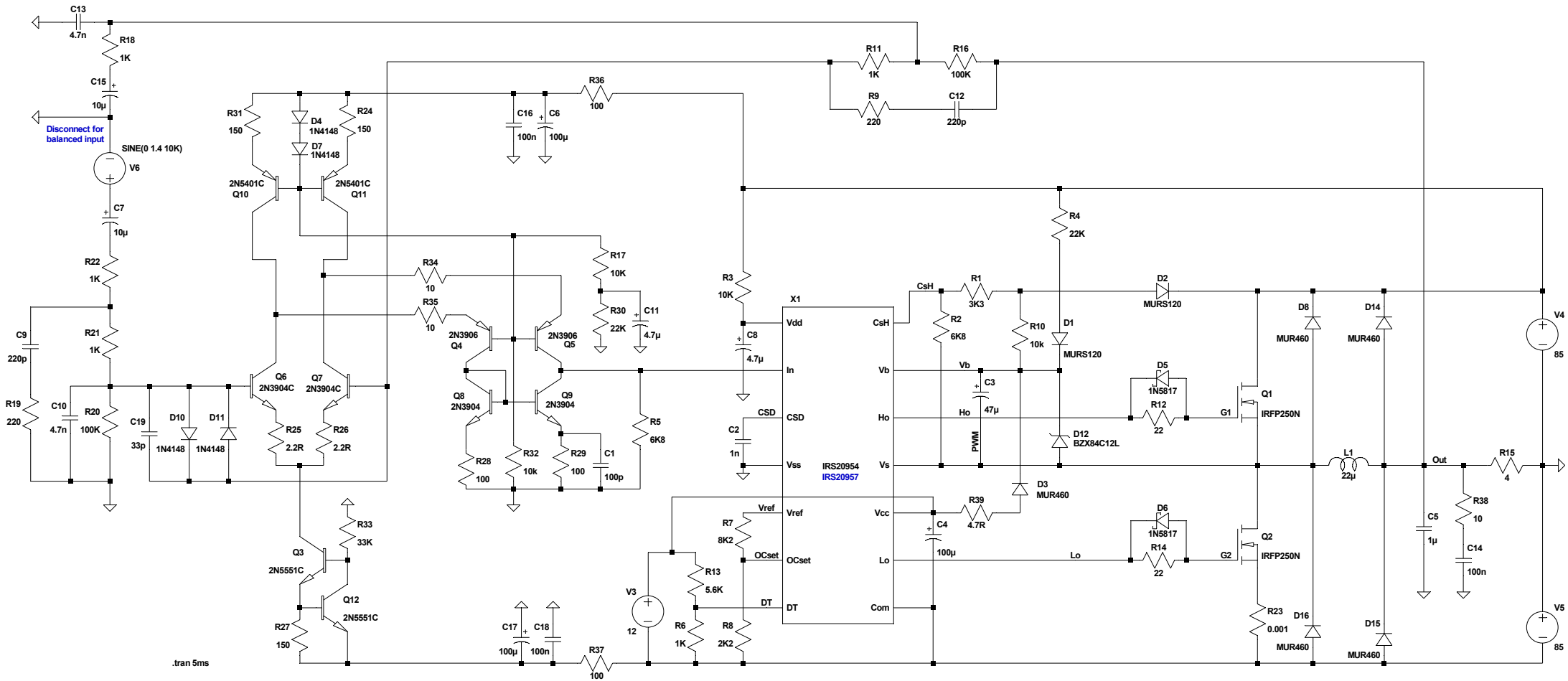

IRS20957 UCD Class D Amplifier Ver.2

Kartino Surodipo - Sept 2015

--- D:\LTC\Simulation\IR20954\Class D IR20954 v.2.asc ---

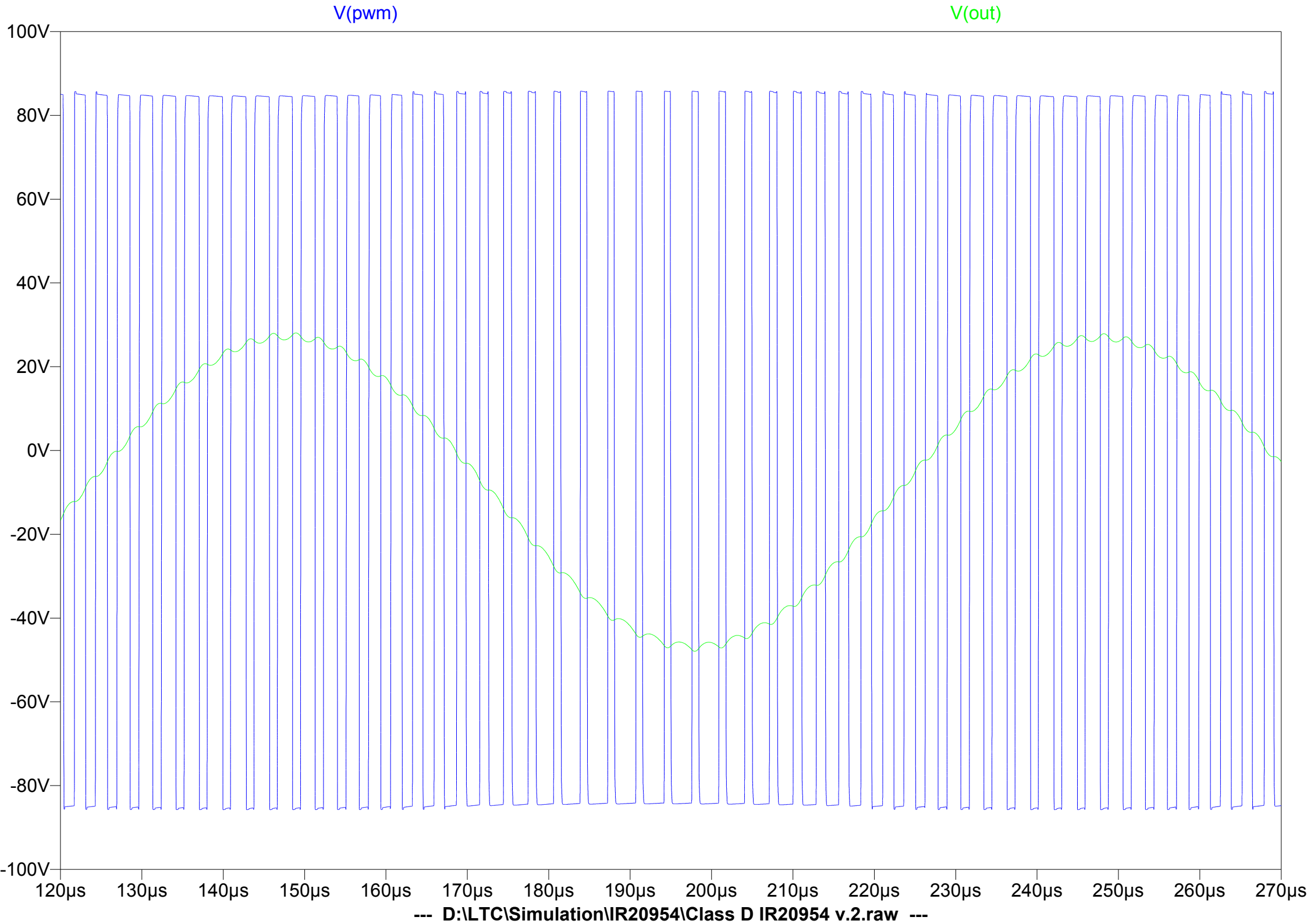
V(pwm)
V(out)
100V
80V
60V
40V
20V
0V
-20V
-40V
-60V
-80V
-100V
120µs
130µs
140µs
150µs
160µs
170µs
180µs
190µs
200µs
210µs
220µs
230µs
240µs
250µs
260µs
270µs
--- D:\LTC\Simulation\IR20954\Class D IR20954 v.2.raw ---