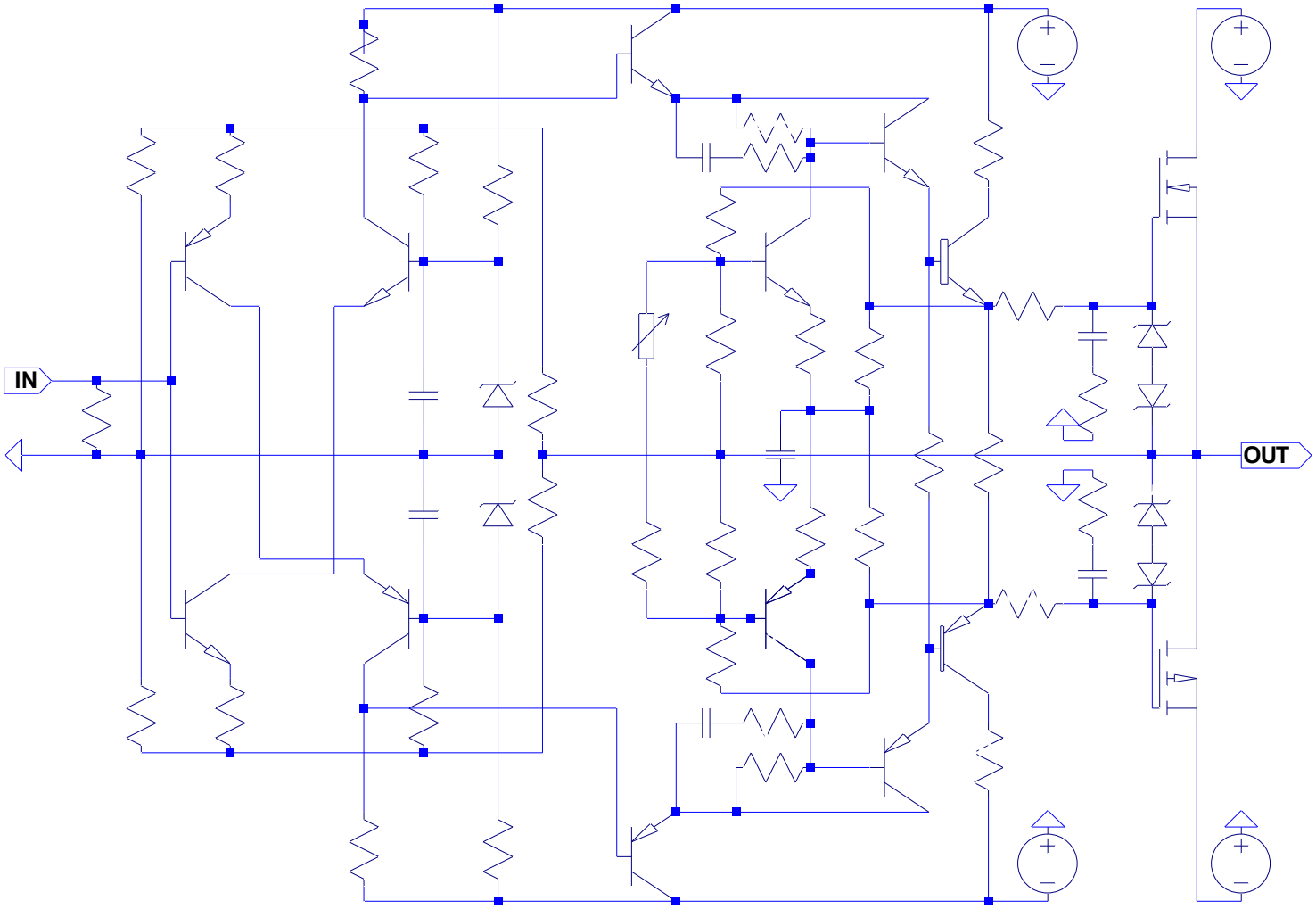

Error correction gain 1 stage

--- E:\Program Files (x86)\LTC\LTspiceIV\cfec.asc ---