CN1202/12
PK
16

www.tiefbassuebertragung.de

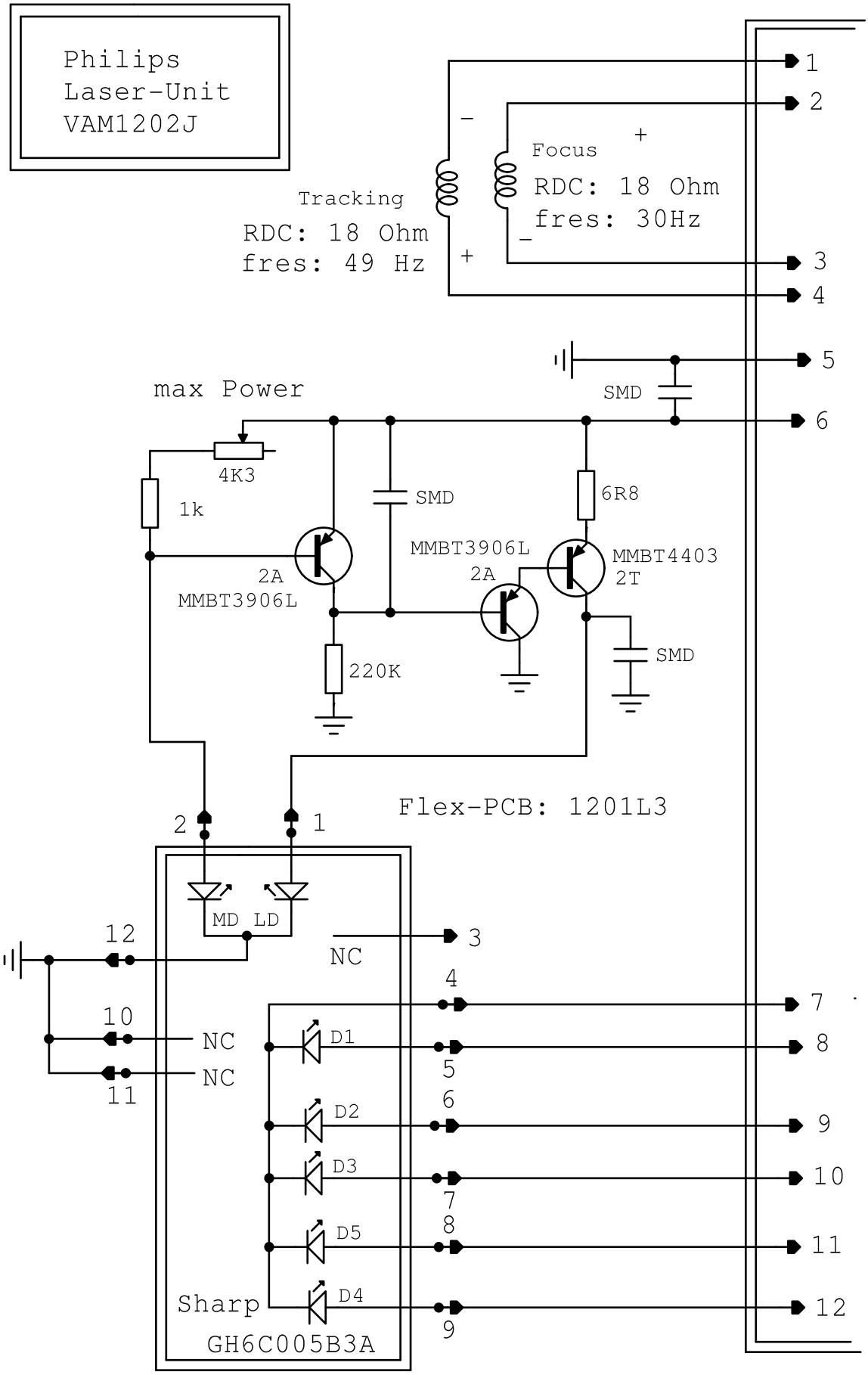

http://www.digchip.com/datasheets/parts/datasheet/424/GH6C005B3A.php
http://www.daisy-laser.com/products/CD/modules/CDPro2/gh6c005b3_e.pdf
http://www.partmate.com/download/VAM1202.pdf

www.tiefbassuebertragung.de

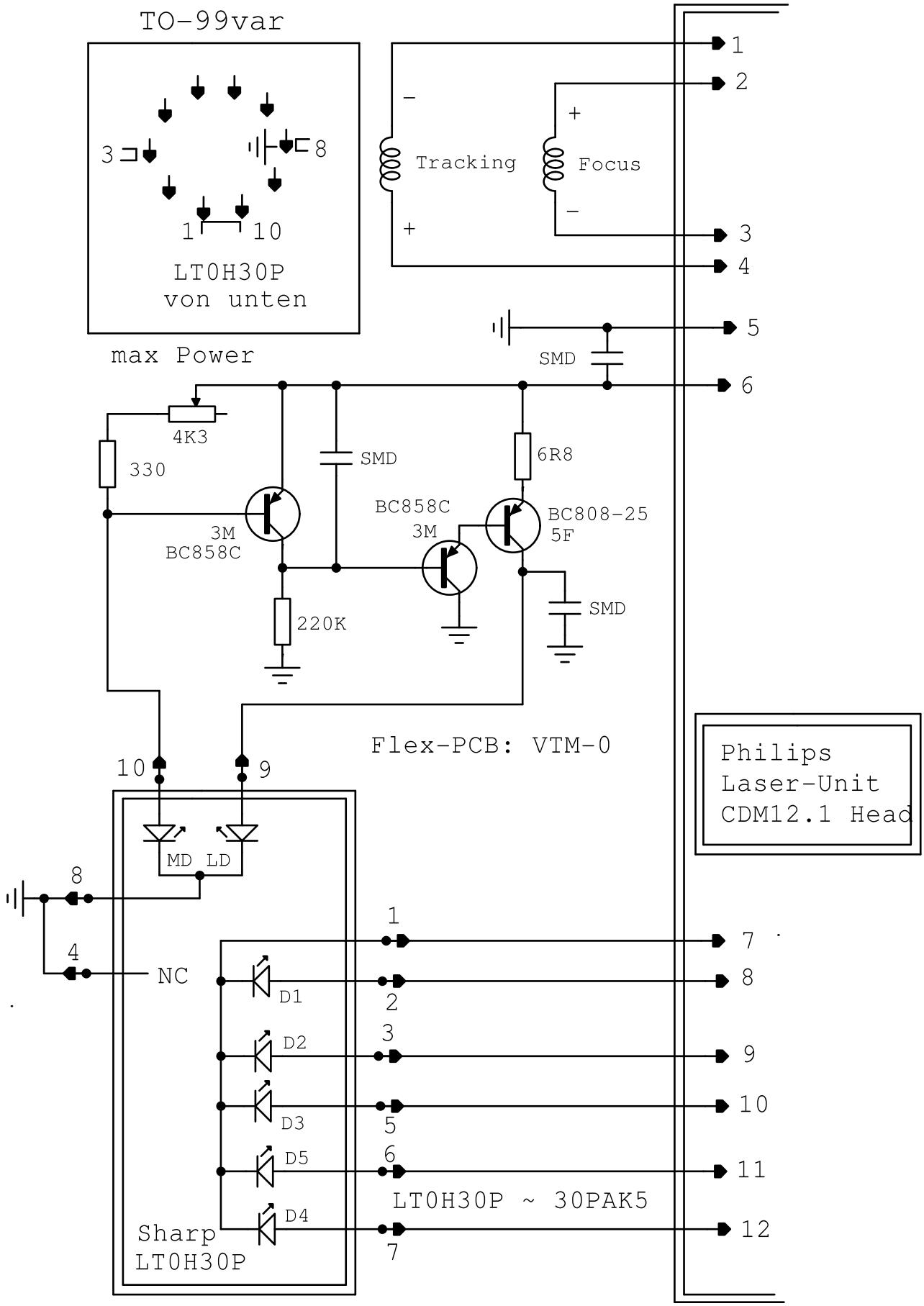

Sharp LT0H30PA, LT0H30PB, LT0H30PC, 30PAK5