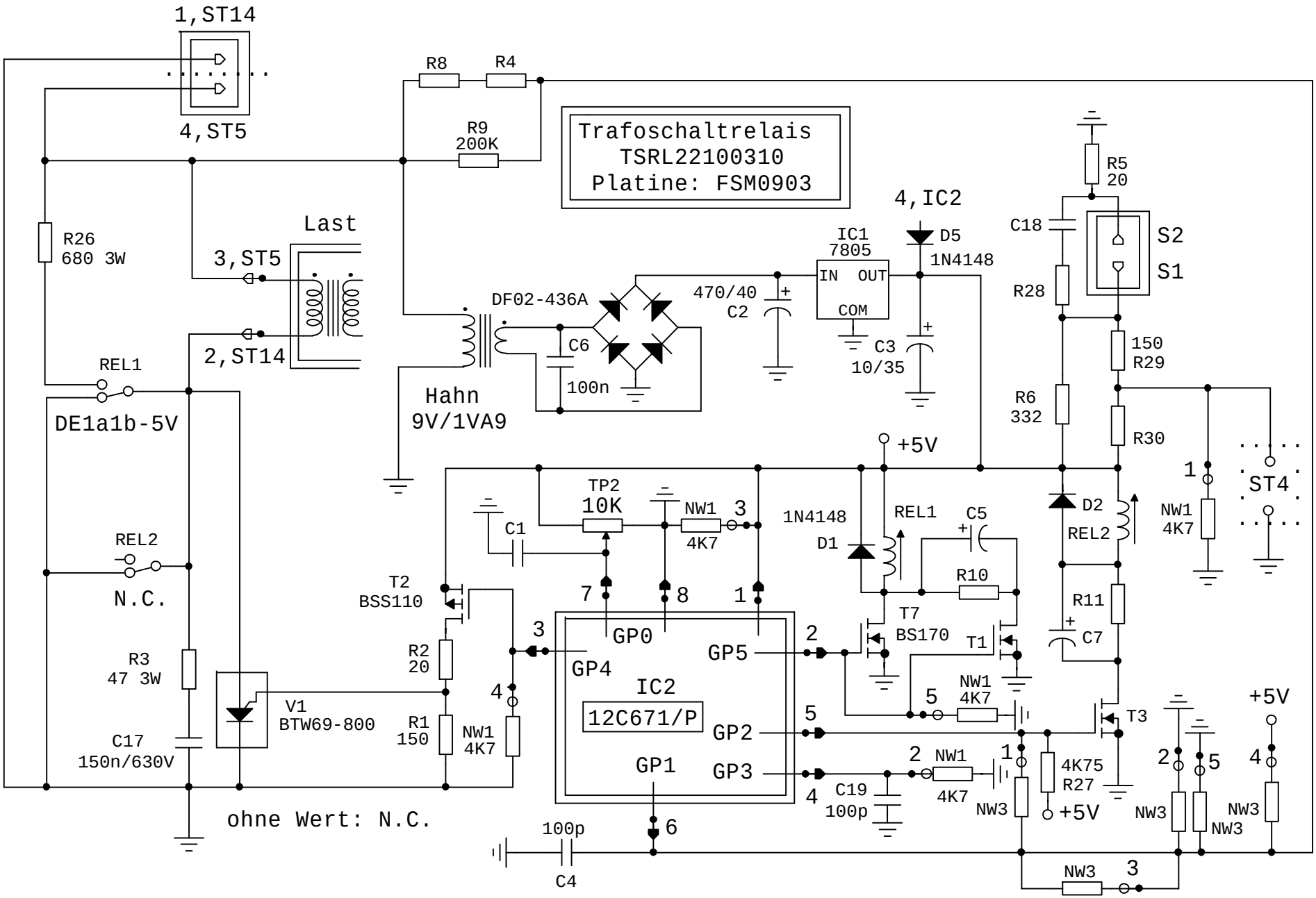
1,ST14
4,ST5
R8
R4
R9
200K
Trafoschaltrelais
TSRL22100310
Platine: FSM0903
R26
680 3W
Last
3,ST5
2,ST14
DF02-436A
C6
100n
Hahn
9V/1VA9
470/40
C2
IC1
7805
IN OUT
COM
C3
10/35
4,IC2
D5
1N4148
R5
20
C18
S2
S1
R28
150
R29
R6
332
R30
REL1
DE1a1b-5V
+5V
TP2
10K
NW1
4K7
C1
1N4148
D1
REL1
C5
D2
REL2
ST4
REL2
N.C.
T2
BSS110
R10
T7
BS170
T1
R11
C7
R3
47 3W
R2
20
GP0
GP4
GP5
IC2
12C671/P
GP2
GP1
GP3
V1
BTW69-800
R1
150
C17
150n/630V
T3
4K75
R27
C19
100p
NW3
ohne Wert: N.C.
100p
C4

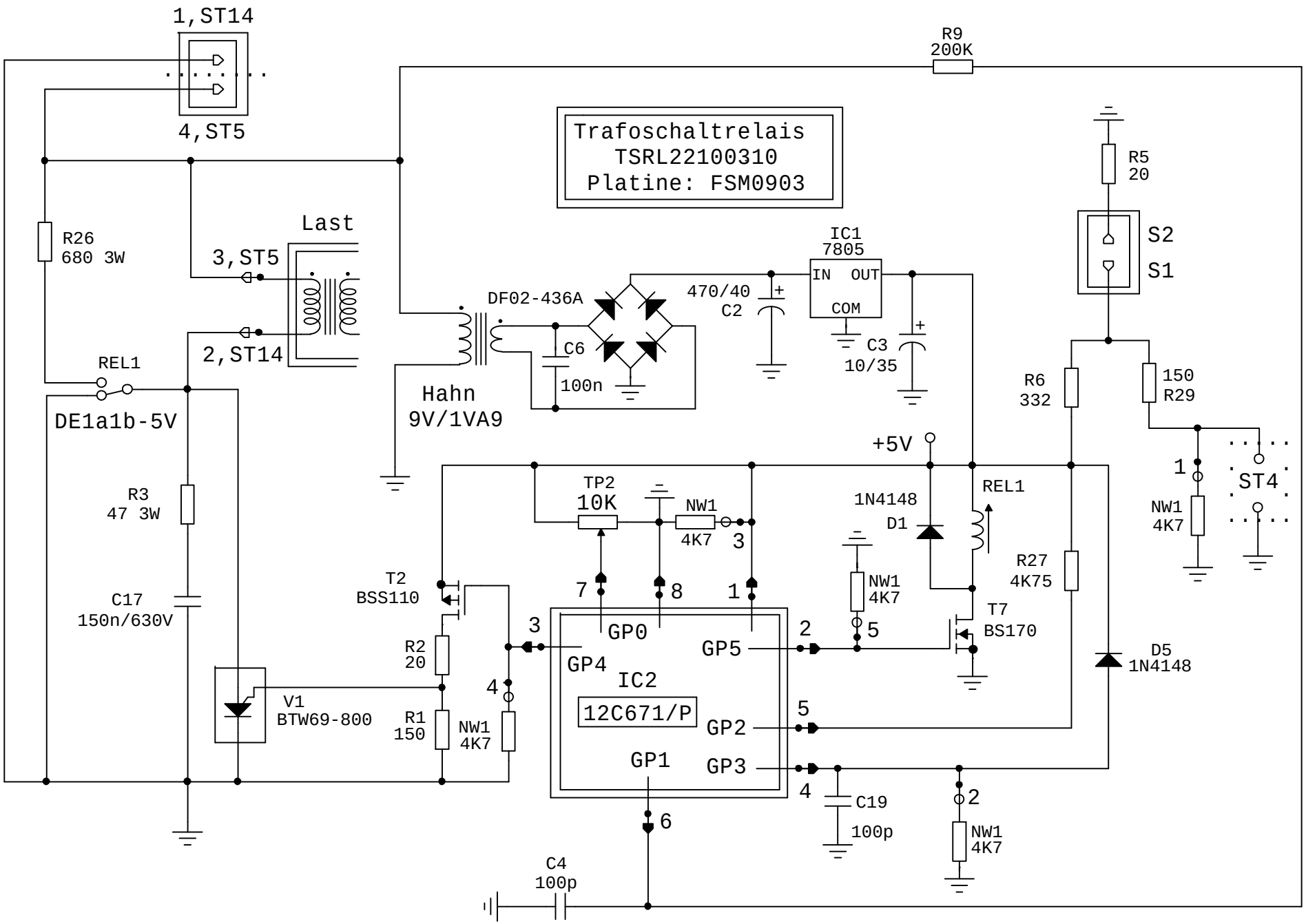
1,ST14
4,ST5
R9
200K
Trafoschaltrelais
TSRL22100310
Platine: FSM0903
R5
20
S2
S1
R26
680 3W
Last
3,ST5
2,ST14
IC1
7805
IN
OUT
COM
DF02-436A
470/40
C2
C3
10/35
C6
100n
REL1
DE1a1b-5V
Hahn
9V/1VA9
R6
332
150
R29
+5V
TP2
10K
NW1
4K7
1N4148
D1
REL1
ST4
NW1
4K7
R3
47 3W
R27
4K75
T2
BSS110
NW1
4K7
T7
BS170
C17
150n/630V
GP0
GP5
GP4
IC2
12C671/P
GP2
GP1
GP3
D5
1N4148
R2
20
V1
BTW69-800
R1
150
NW1
4K7
C19
100p
NW1
4K7
C4
100p