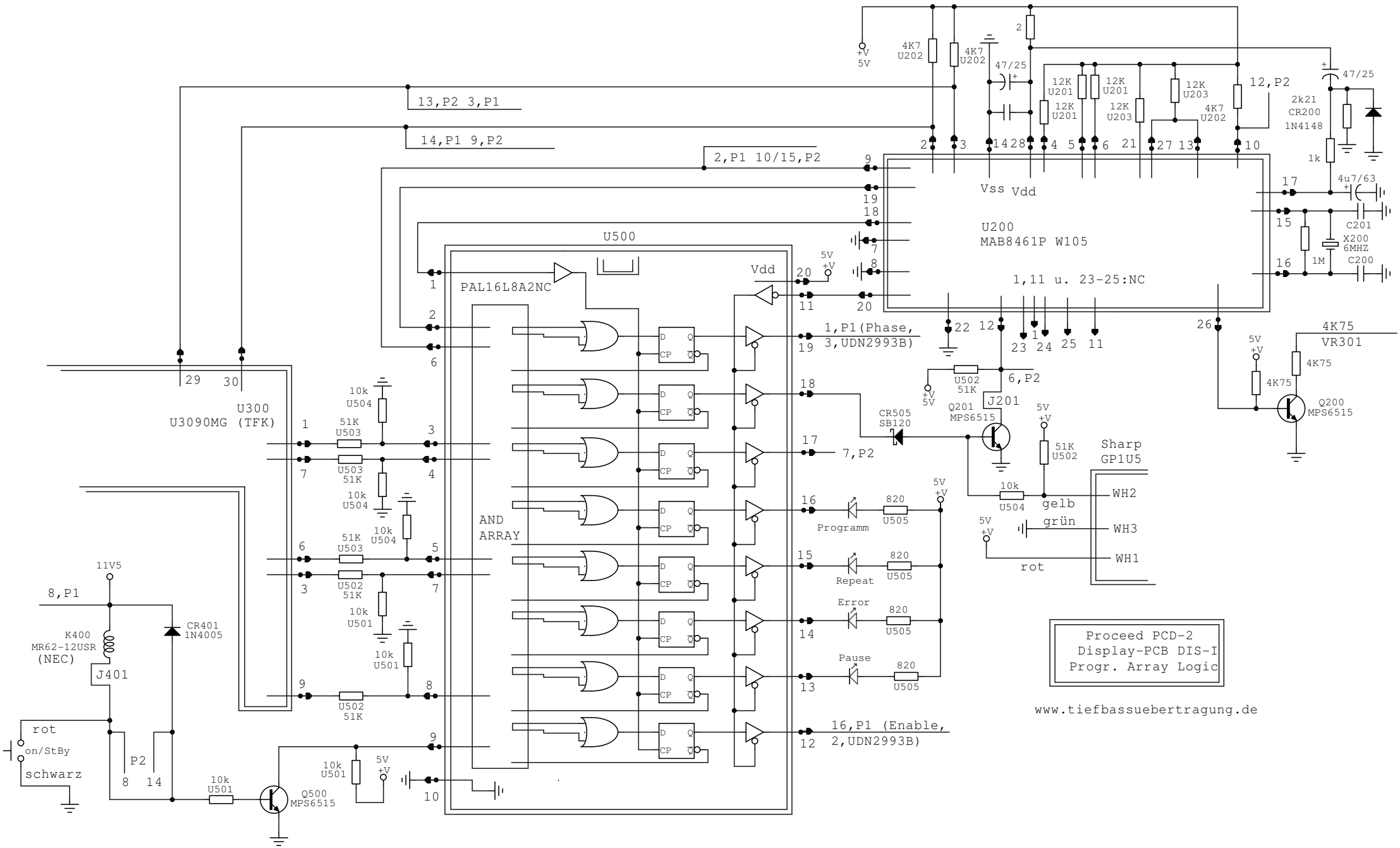
13,P2 3,P1
14,P1 9,P2
2,P1 10/15,P2
U500
PAL16L8A2NC
AND
ARRAY
U300
U3090MG (TFK)
U200
MAB8461P W105
Vss Vdd
1,11 u. 23-25:NC
1,P1(Phase,
3,UDN2993B)
7,P2
16,P1 (Enable,
2,UDN2993B)
Programm
Repeat
Error
Pause
Sharp
GP1U5
WH2
WH3
WH1
gelb
grün
rot
J201
Q201
MPS6515
CR505
SB120
Q200
MPS6515
Q500
MPS6515
K400
MR62-12USR
(NEC)
J401
CR401
1N4005
11V5
8,P1
on/StBy
schwarz
X200
6MHZ
C200
C201
VR301
4K75
Proceed PCD-2
Display-PCB DIS-I
Progr. Array Logic
www.tiefbassuebertragung.de