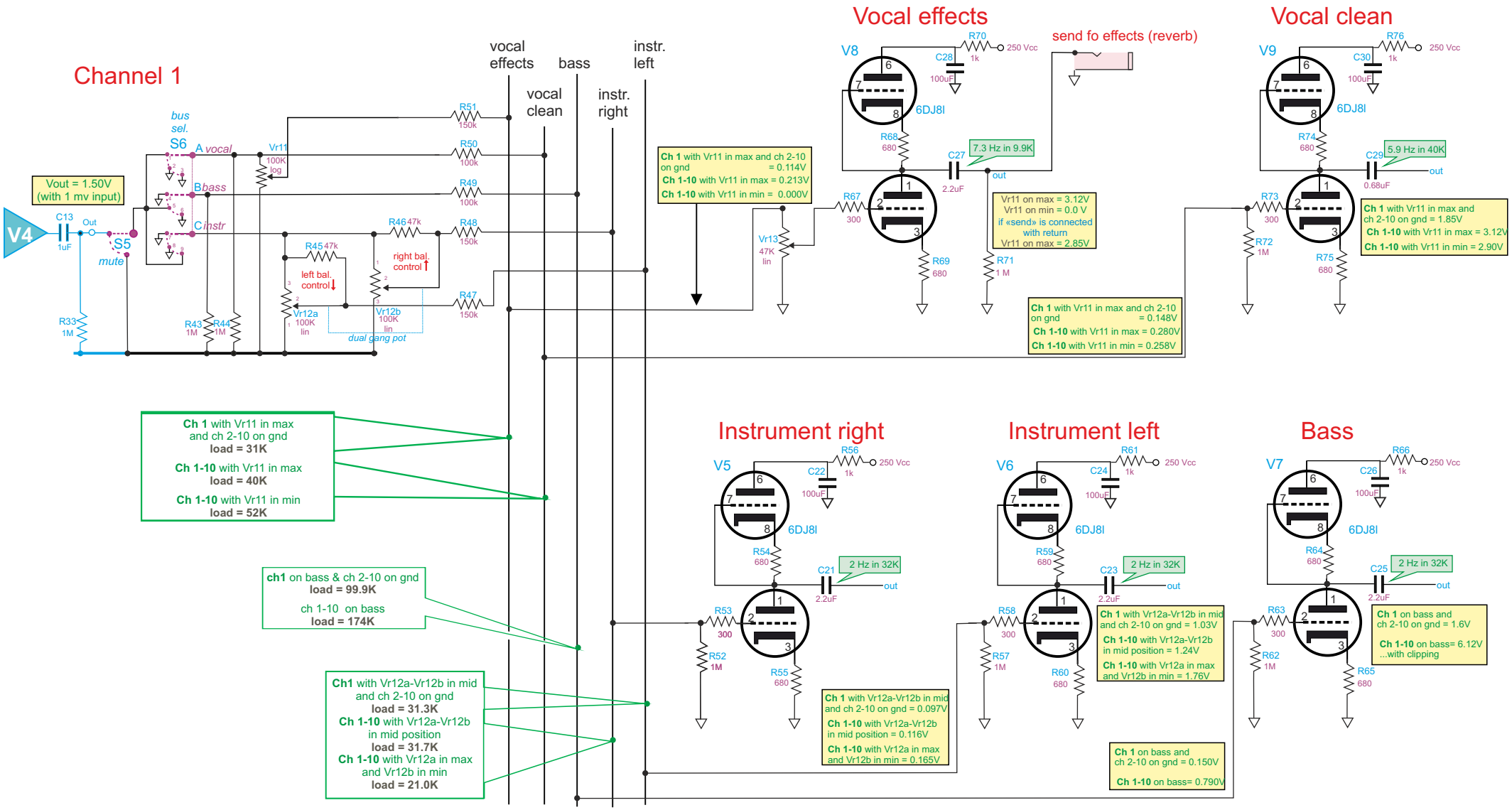bus amplifiers