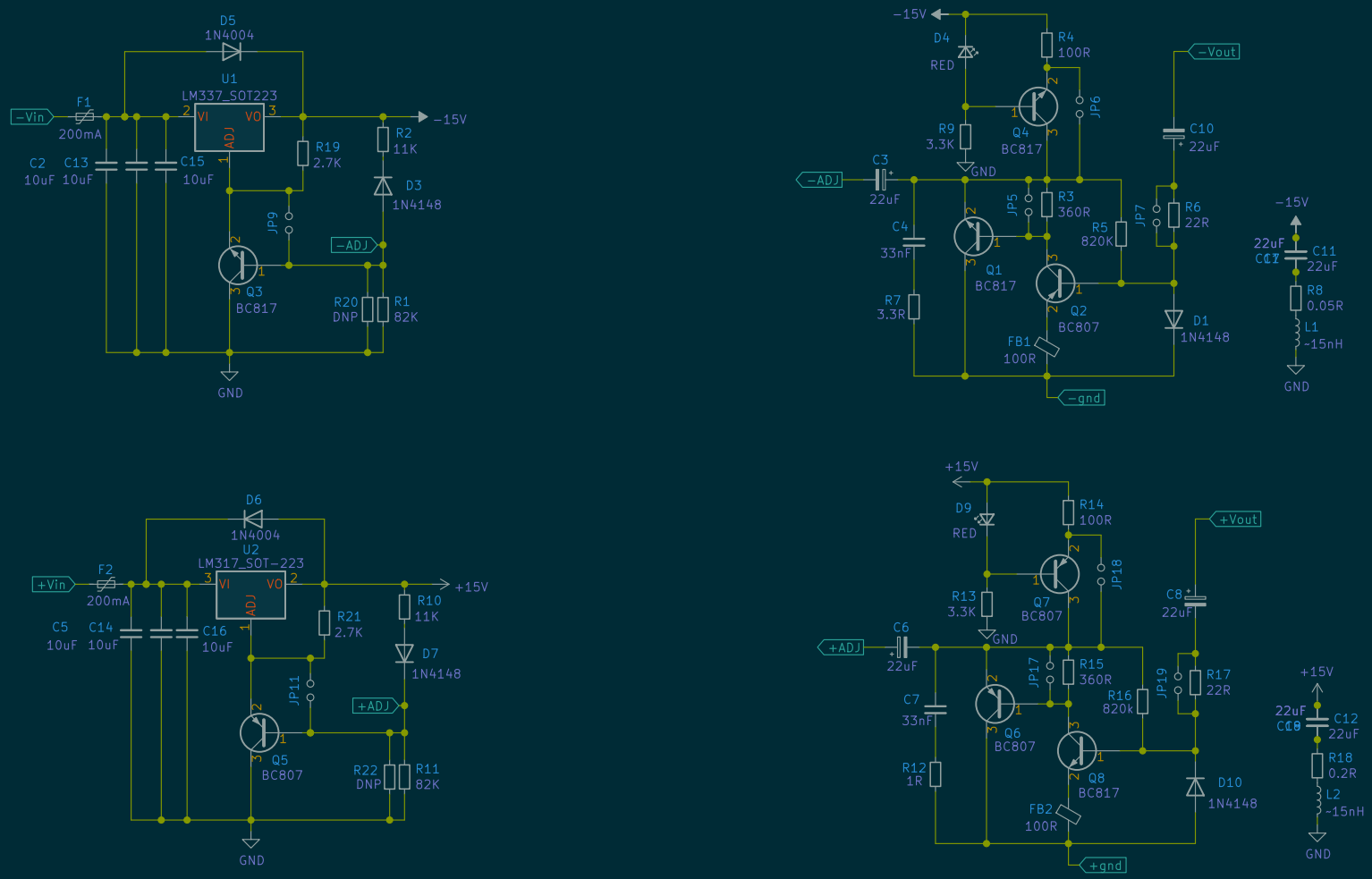

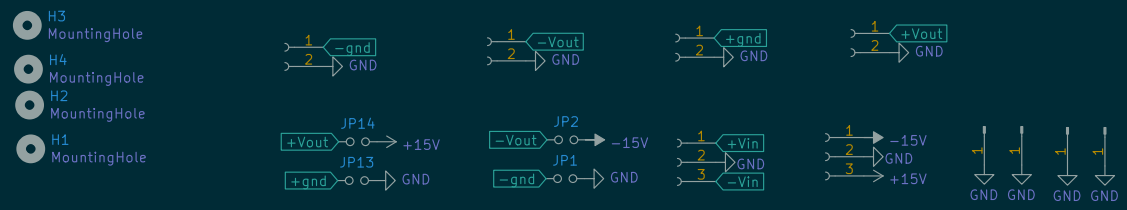

Sheet: /
File: denoiser.kicad_sch

Title: SMD dual LM3x7 + denoiser

Size: A4	Date: 2022-03-27	Rev: 2
KiCad E.D.A. kicad (6.0.4)		Id: 1/1