Vinoise 1kHz at max gain -> 1.7179312nV/Hz½
Gain 7 - 60 dB

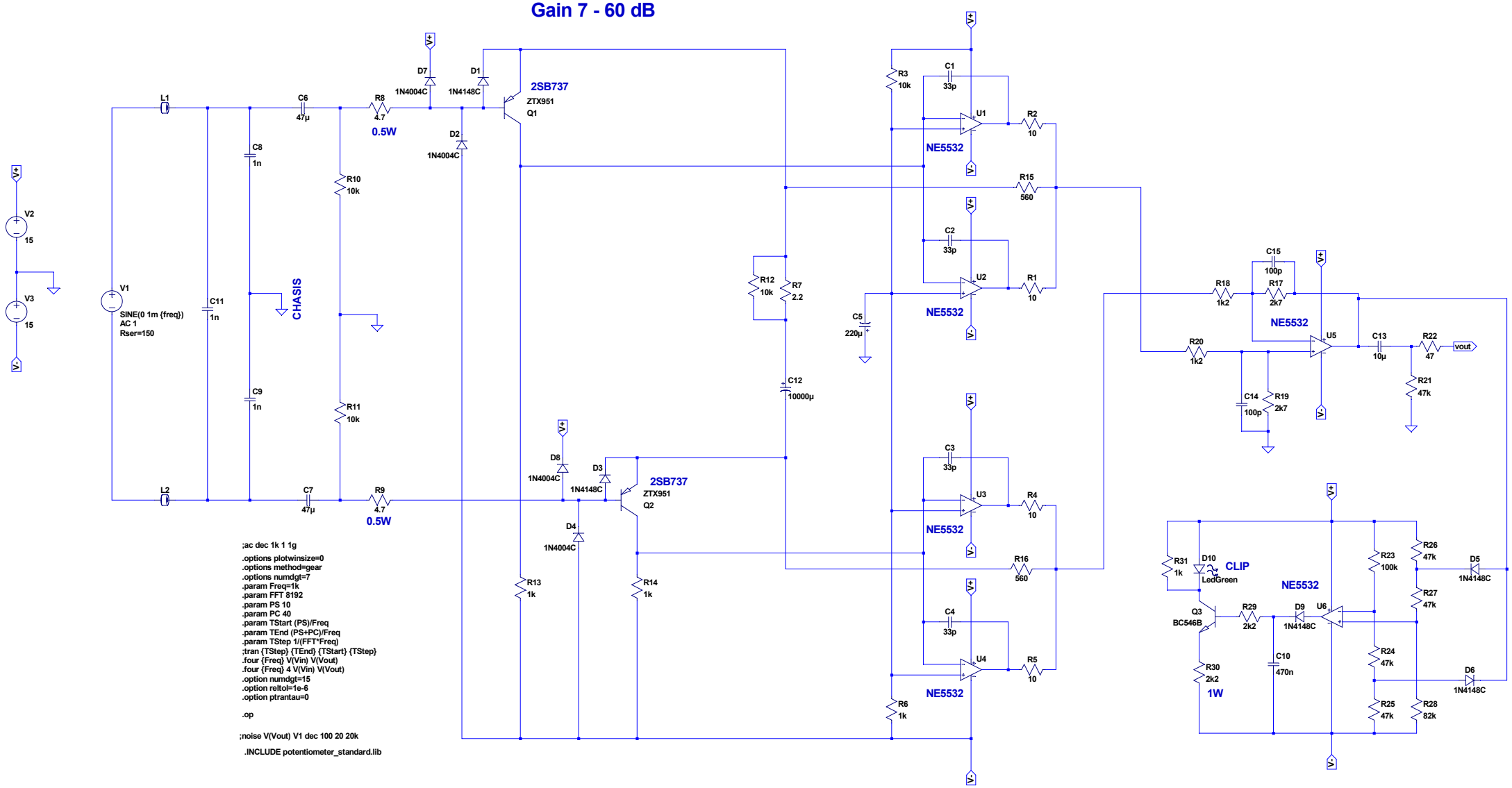


```
;ac dec 1k 1 1g
.options plotwinsize=0
.options method=gear
.options numdgt=7
.param Freq=1k
.param FFT 8192
.param PS 10
.param PC 40
.param TStart (PS)/Freq
.param TEnd (PS+PC)/Freq
.param TStep 1/(FFT*Freq)
;tran {TStep} {TEnd} {TStart} {TStep}
.four {Freq} V(Vin) V(Vout)
.four {Freq} 4 V(Vin) V(Vout)
.option numdgt=15
.option reltol=1e-6
.option ptrantau=0

.op

;noise V(Vout) V1 dec 100 20 20k

.INCLUDE potentiometer_standard.lib
```

--- G:\MyData\LtSpice\balance microphone pre-amp PNP input v2.asc ---