trafo need to be at least 650VA or higher 800VA

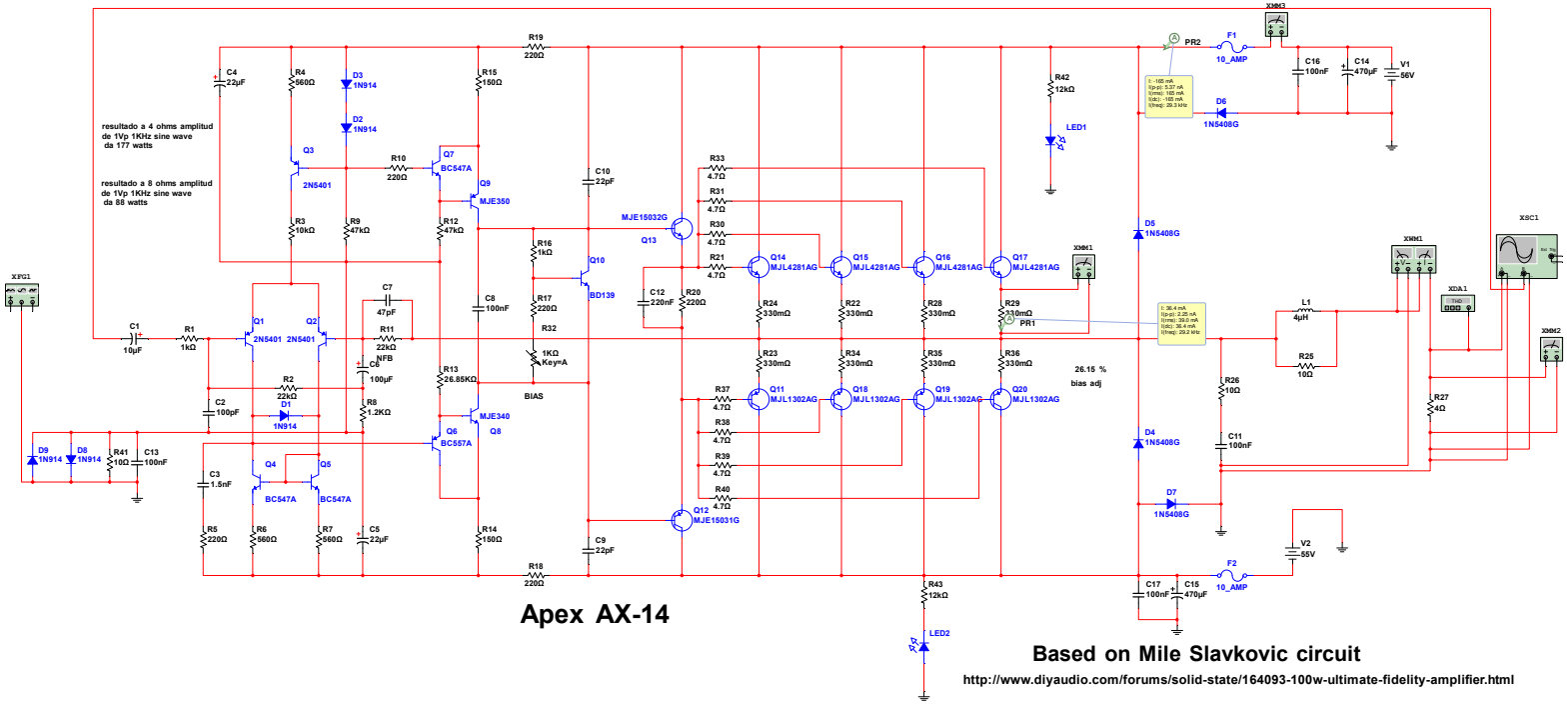

Apex AX-14

Based on Mile Slavkovic circuit

http://www.diyaudio.com/forums/solid-state/164093-100w-ultimate-fidelity-amplifier.html