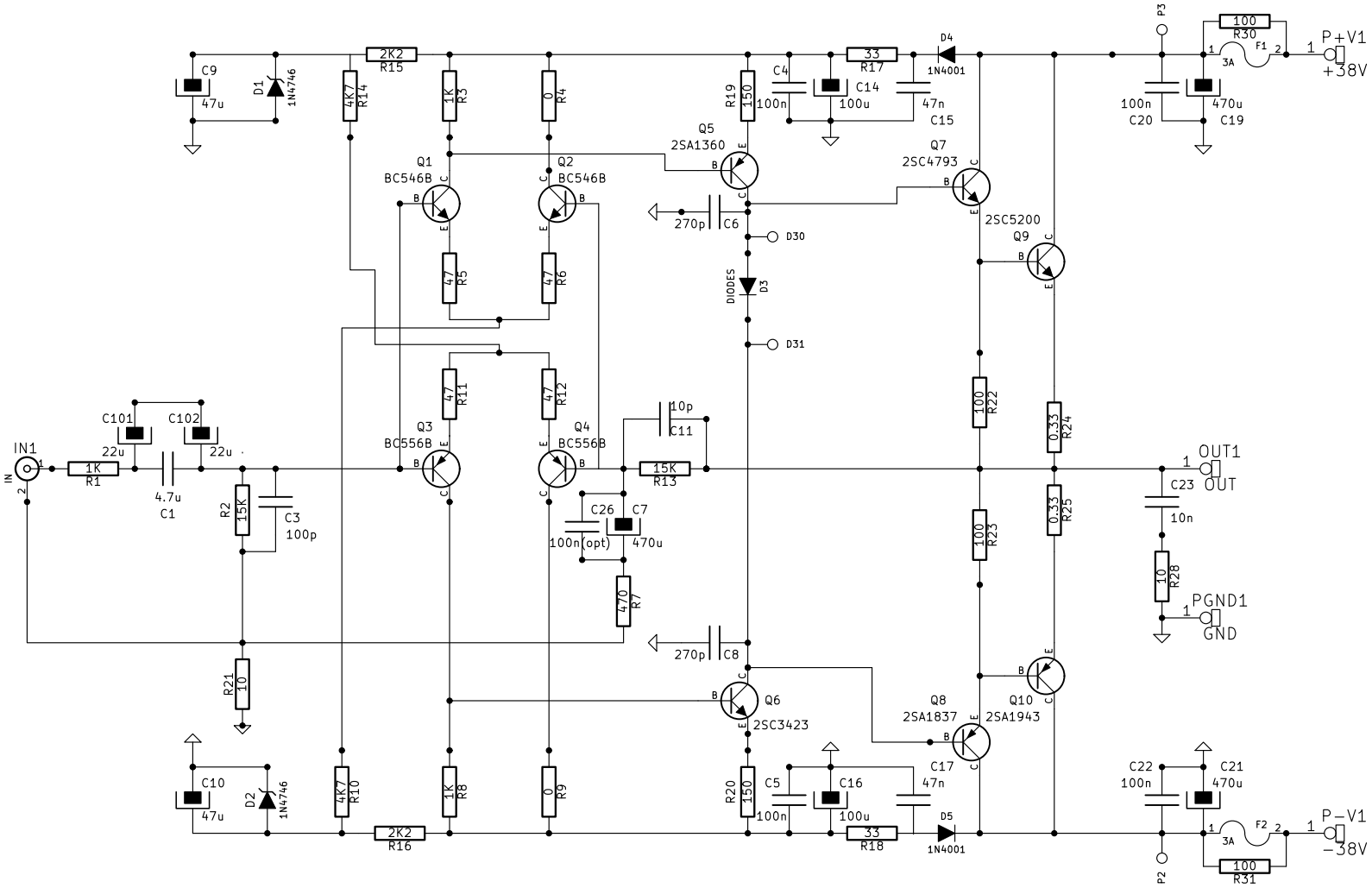

File: awb50-b1.sch		
Sheet: /		
Title:		
Size: A4	**Date: 20 jun 2010**	**Rev:**
KiCad E.D.A.		Id: 1/1

+V
-V
AWB20-B1
(c)Wahab
2010

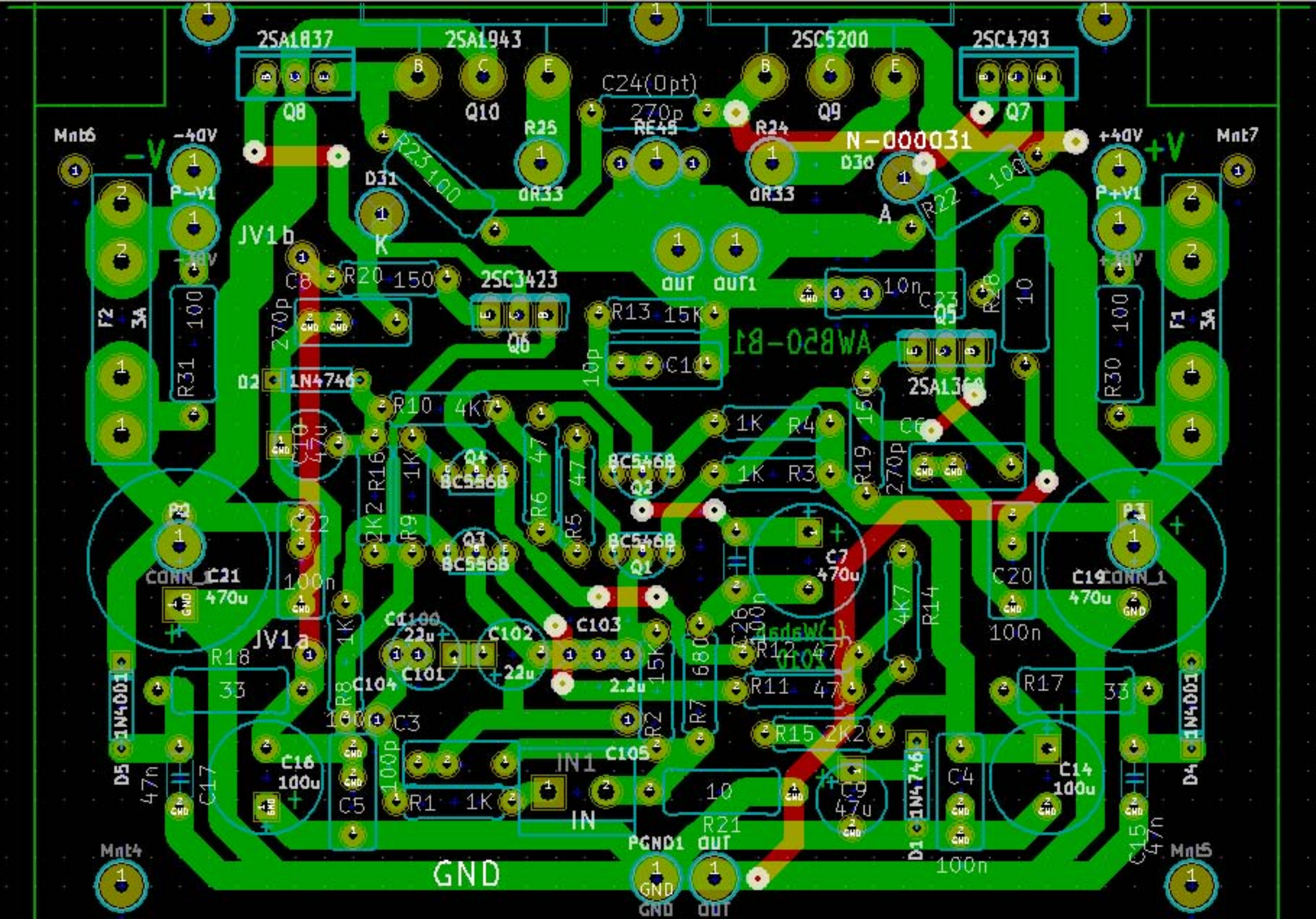
2SA1837
2SA1943
2SC5200
2SC4793
Q8
Q10
Q9
Q7
C24(Opt)
270p
RE45
R25
R24
N-000031
D30
D31
R23 100
0R33
0R33
R22 100
Mnt6
-40V
-V
P-V1
+40V
+V
P+V1
Mnt7
JV1b
K
A
R20 150
2SC3423
Q6
OUT
OUT1
R13 15K
C10
10n
C23
Q5
R28
10
R31 100
R30 100
F2 3A
F1 3A
C8
270p
D2 1N4746
2SA1360
R10 4K7
1K R4
1K R3
R19 150
C6
270p
C10 47u
R16 1K
Q4 BC556B
R6 47
R5 47
BC546B Q2
BC546B Q1
Q3 BC556B
P2
P3
CONN_1
C21 470u
C22 100n
C7 470u
C20 100n
C19 470u
JV1a
R18 33
C100 22u
C101 22u
C102
C103
2.2u
R12 47
R11 47
4K7 R14
R17 33
R8 100
C104
C3
R2 15K
R7 680
C26 100n
R15 2K2
D5 1N4001
D4 1N4001
C17 47n
C16 100u
C5 100p
R1 1K
IN1
C105
10
R21
C9 47u
D1 1N4746
C4 100n
C14 100u
C15 47n
IN
PGND1
OUT
GND
GND
GND
OUT
Mnt4
Mnt5