Art Welter's Keystone Sub

3/4" Material

1/8" minimum space between parts as shown

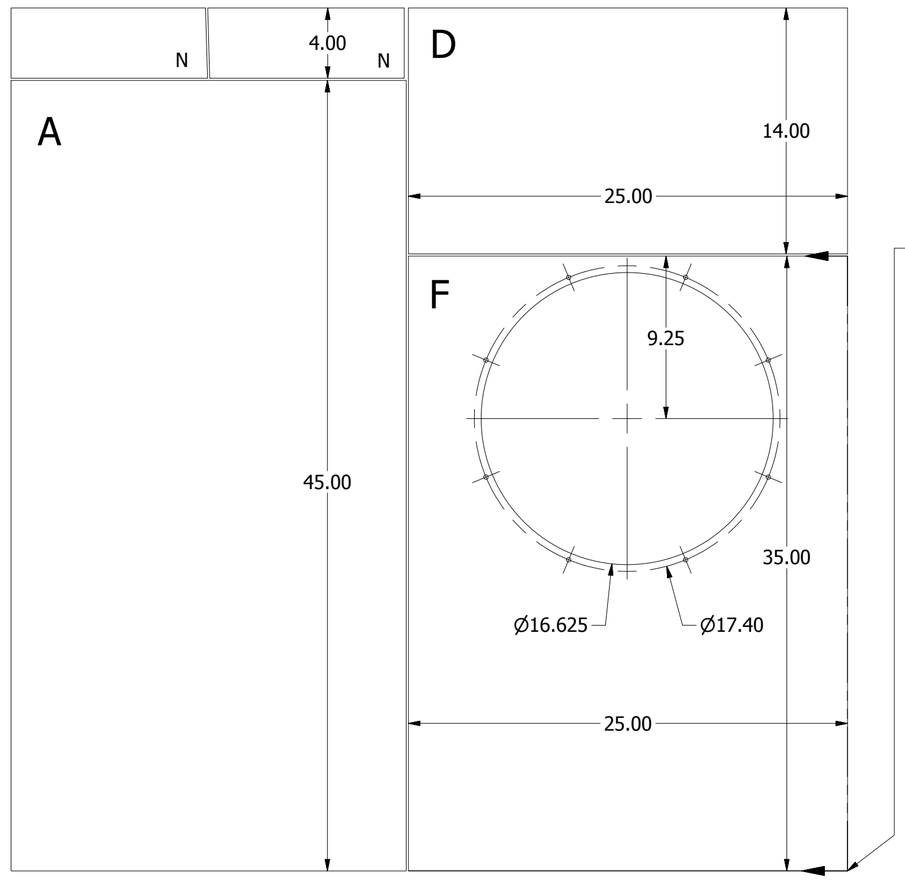

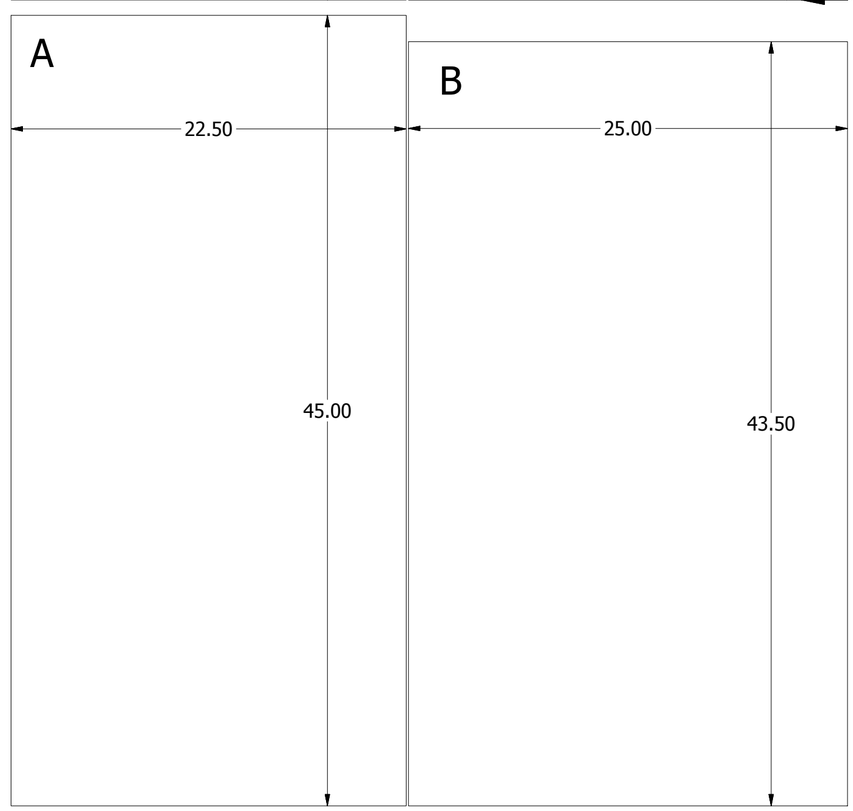

Part	Angle	Length 1	Length 2
I	88.24	3.5625	3.3860
J	86.60	4.7158	4.3750
K	86.60	5.8125	5.4713
L	83.36	8.5000	8.1654
M	65.00	17.3652	15.5000
N	88.36	11.1875	11.0731

Part	Part Description	Quantity
A	Sides	2
B	Back	1
C	Top, Bottom	2
D	Top Front Panel	1
E	Keystone Exit Panel	1
F	Speaker Baffle	1
G	Horn Top	1
H	Horn Back	1
I	Horn Brace 1	2
J	Horn Brace 2	2
K	Horn Brace 3	1
L	Top Brace	2
M	Front Brace	2
N	Wing Brace (W.B.)	2
O	WB Attachment Cleat	2
P	Exit Cleat	1
Q	Front Side Cleat	2
R	Front Bottom Cleat	1

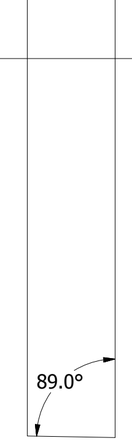

Baffle Bottom Detail
SCALE 1 : 1

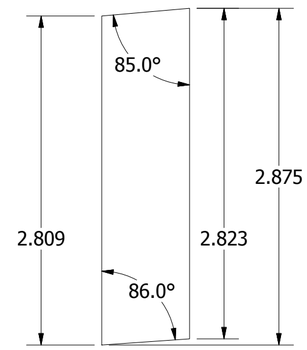

Horn Top Detail
SCALE 1 : 1

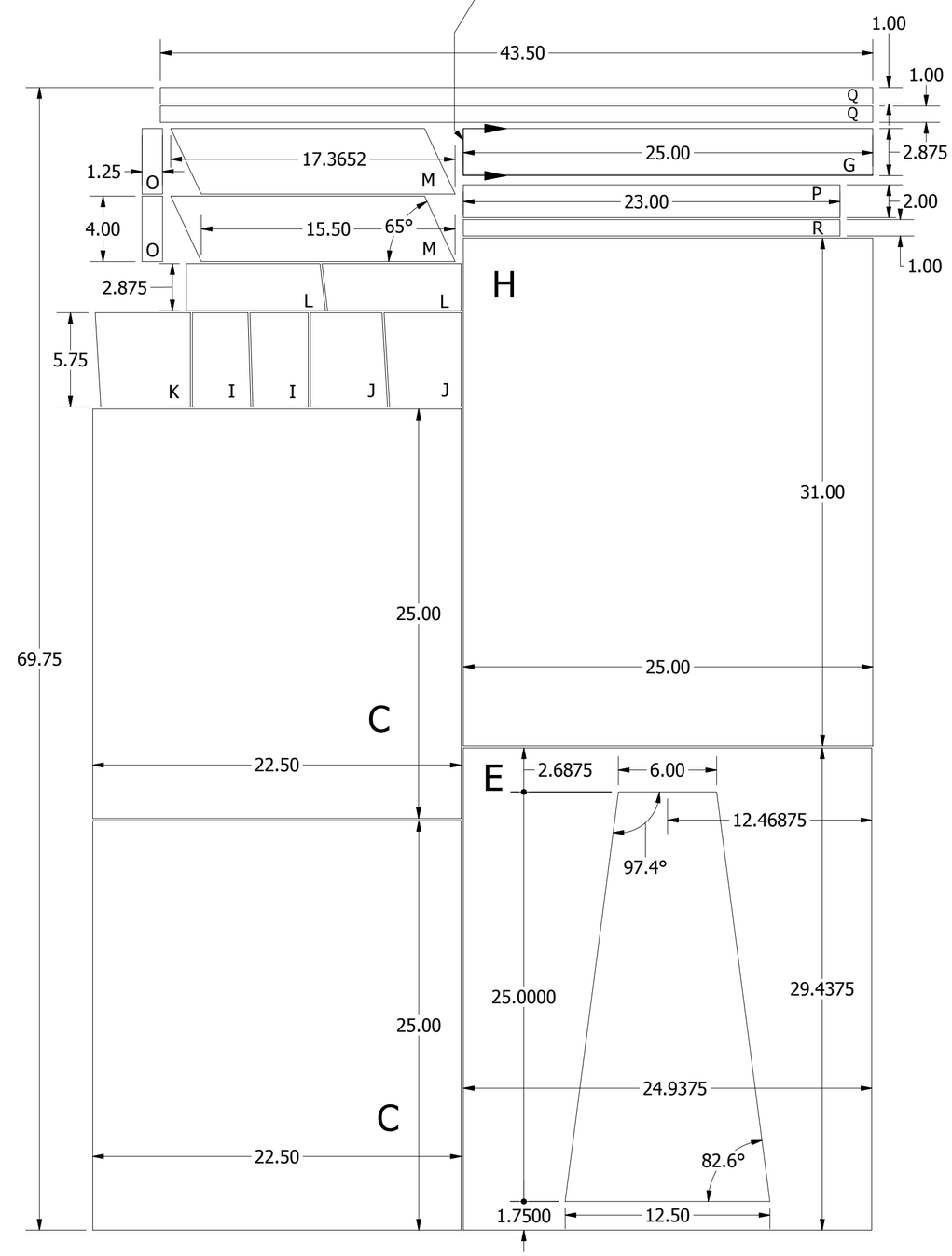

Art Welter's Keystone Sub
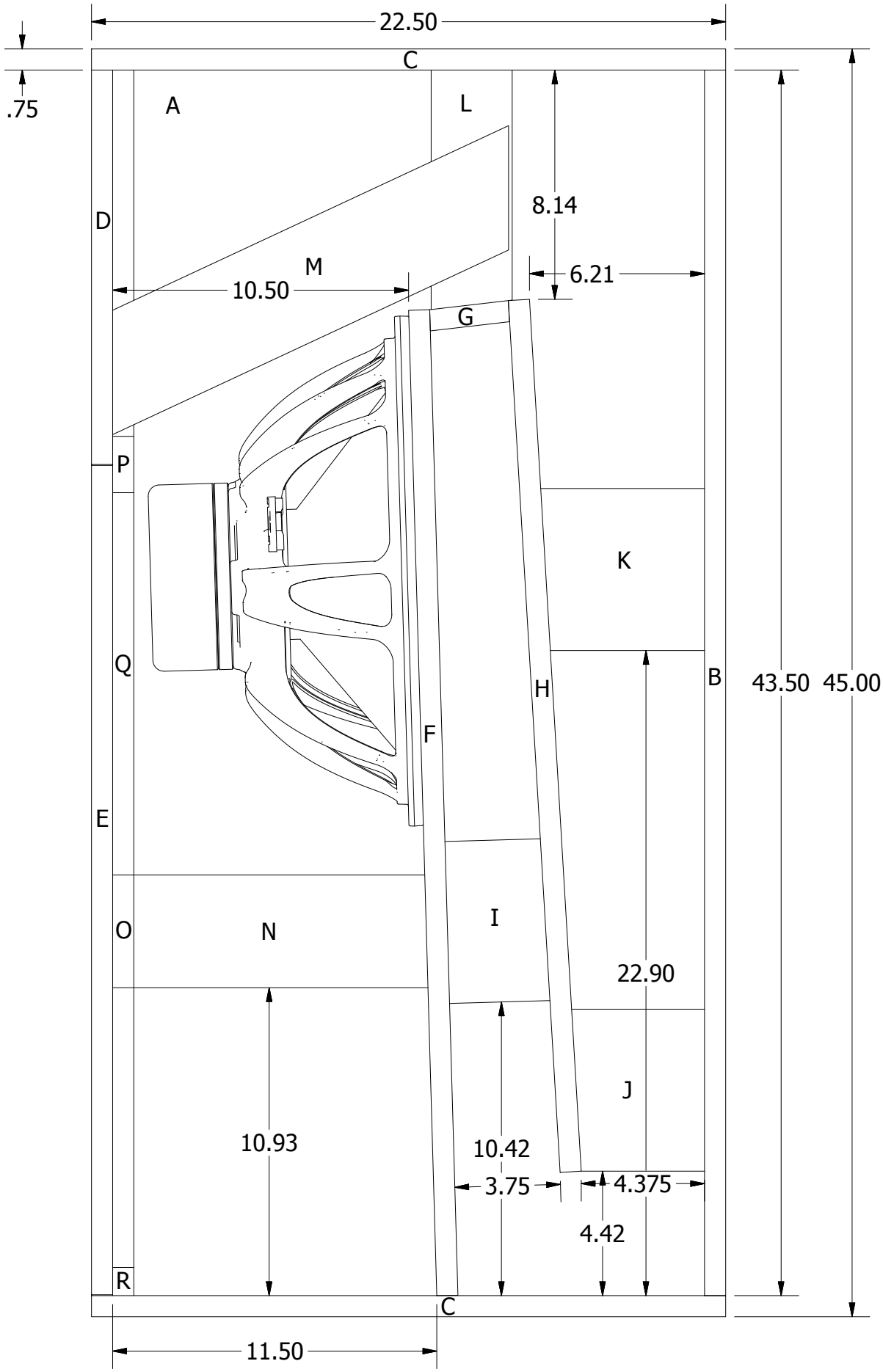
3/4" Material