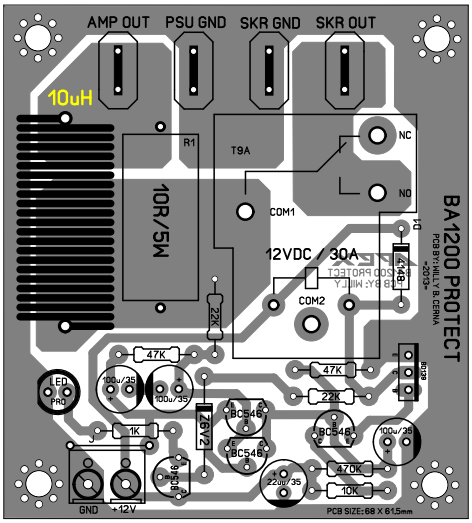
AMP OUT
PSU GND
SKR GND
SKR OUT
10uH
R1
T9A
NC
NO
10R/5W
COM1
12VDC / 30A
D1
4148
COM2
22K
47K
LED
PRO
100u/35
BC546
1K
J
GND
+12V
470K
10K
220u/35
BA1200 PROTECT
PCB BY: WILLY B. CERNA
PCB SIZE: 68 X 61.5mm