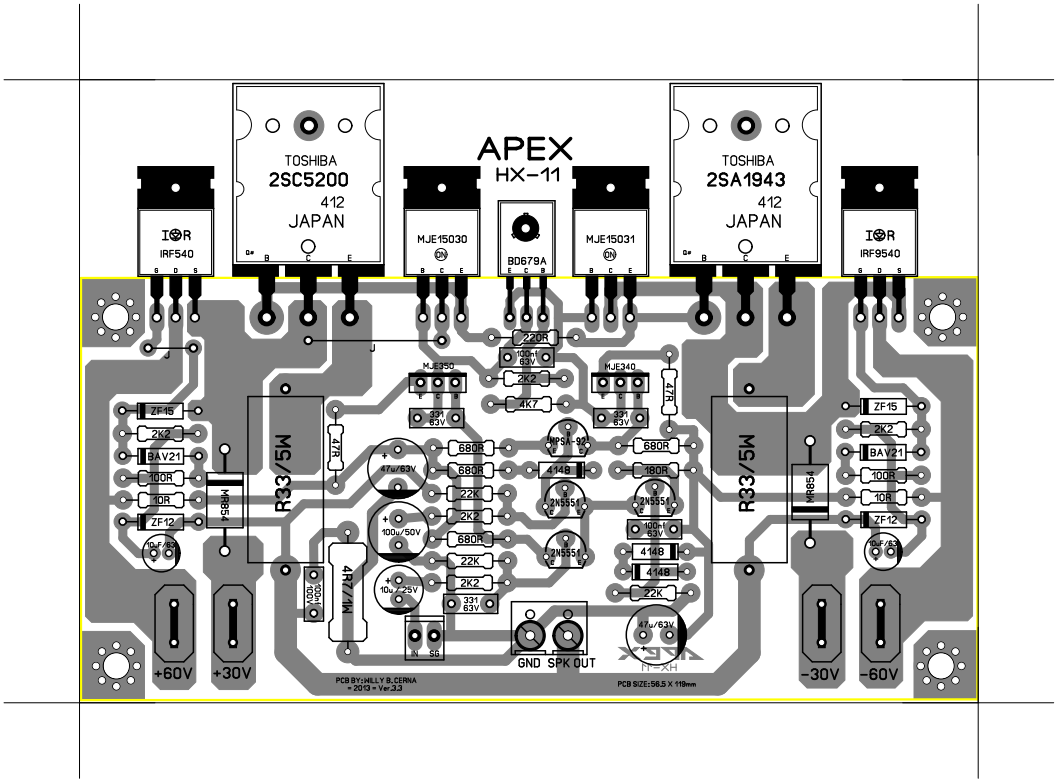
APEX
HX-11
TOSHIBA
2SC5200
412
JAPAN
TOSHIBA
2SA1943
412
JAPAN
IRF540
IRF9540
MJE15030
MJE15031
BD679A
MJE350
MJE340
R33/5W
R33/5W
MR854
MR854
4R7/1W
220R
2K2
4K7
680R
22K
2K2
680R
22K
2K2
680R
180R
4148
4148
4148
22K
47R
47R
47u/63V
100u/50V
10u/25V
331 63V
100n1 63V
ZF15
2K2
BAV21
100R
10R
ZF12
10uF/63V
+60V
+30V
-30V
-60V
GND SPK OUT
PCB BY:HILLY B.CERNA
= 2013 = Ver.3.3
PCB SIZE:56.5 X 119mm