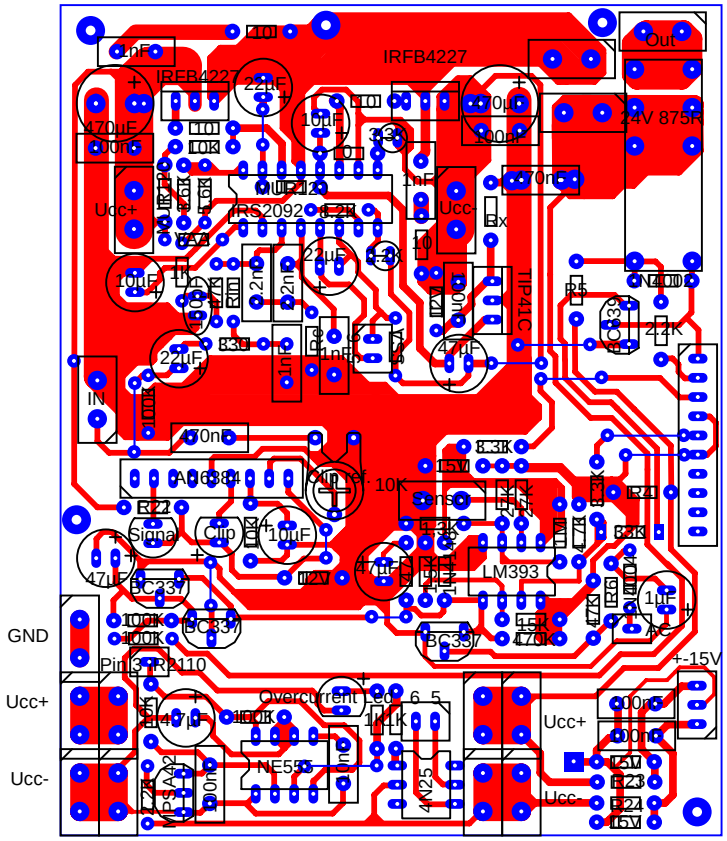
IRFB4227
IRFB4227
Out
24V 875R
Ucc+
Ucc-
IRS2092
TIP41C
IN
AD6384
Signal
Clip
LM393
BC337
BC337
BC337
GND
Ucc+
Ucc-
Overcurrent
NE555
4N25
Ucc+
Ucc-
+-15V