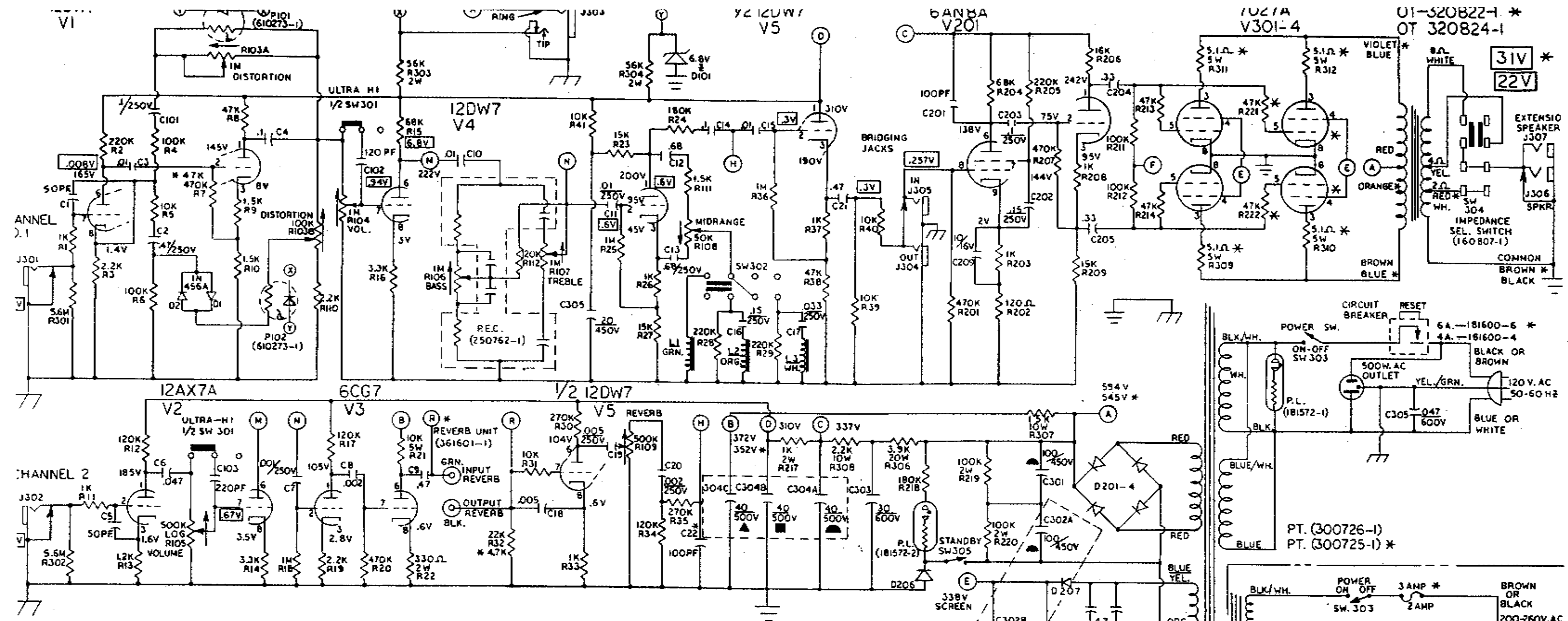

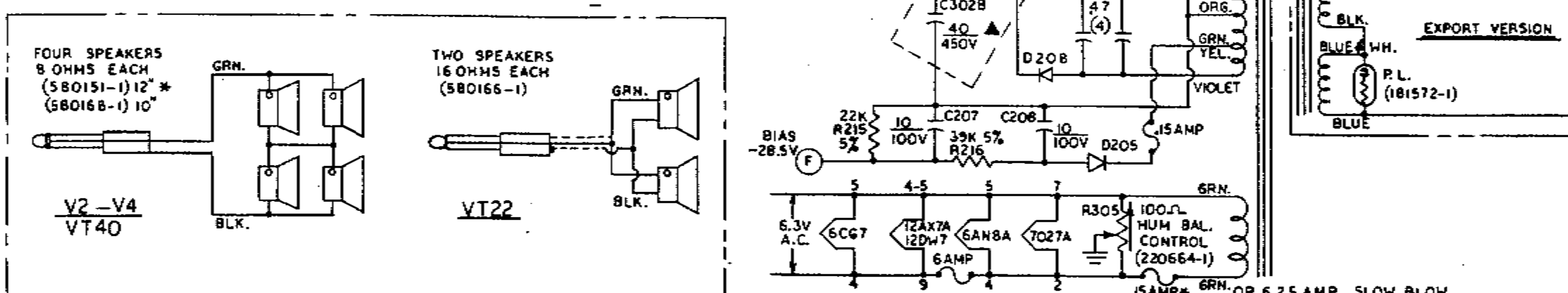

NOTES:

ALL RESISTORS IN OHMS 1/2W 10% UNLESS OTHERWISE SPECIFIED.

ALL CAPACITORS IN MFD. AND 400V UNLESS OTHERWISE SPECIFIED.

D.C. VOLTAGE READINGS WITH NO SIGNAL APPLIED USING A 20,000 OHM PER VOLT VOLTMETER.

NUMBERS IN PARENTHESIS REFER TO MAGNAVOX PART NUMBER.

D.C. VOLTAGE READINGS ARE POSITIVE WITH RESPECT TO CHASSIS GROUND UNLESS OTHERWISE SPECIFIED.

THE TWO 7027 OUTPUT TUBES MAY BE REPLACED WITH 6550 TUBES AT THE CUSTOMER'S OPTION FOR IMPROVED PERFORMANCE.

DO NOT OPERATE AMPLIFIER WITH EITHER OPTOISOLATOR P101 OR P102 REMOVED FROM CIRCUIT AS DAMAGE WILL RESULT TO REMAINING DEVICE.

A.C. VOLTAGES ARE NOTED WITHIN BOXES.

CIRCUIT OF CHASSIS MAY VARY SLIGHTLY FROM THAT SHOWN HERE DUE TO NORMAL PRODUCTION CHANGES.

PARTS INDICATED WITH ASTERISK ARE USED ON V4 AND VT22 MODELS ONLY.

2-10-76 [illegible]
Removed Resistor from Power [illegible] & Rev. R210 to R306, R213 to R216, R220 to R307, R221 to R219, R222 to R219, R223 to R312, R225 to R307, R226 to R310 [illegible] Rev. to Parallel Wiring, Add. [illegible] CH. Wiring – Placed Before Circuit Bkr. 6 Amp Fuse Added [illegible] Preamp Board. [illegible] Amp Fuse Added to Bias. [illegible] AX7/12DW7 Filaments Connected Parallel Conn. Connection Pts. [illegible] @ D-2 & F-3. Wiring Colors [illegible] (Orange & Grn/Yellow) [illegible] Amp Jack Wire Deleted.
CN-Z500 3-12-76 [illegible]

Revised Pins 5-M & 5-L [illegible] C07 Separated from GANBA. [illegible] .15 Amp Fuse @ 9-N for [illegible] VT22 Versions. Delete [illegible] C206 @ 5-T. Rev. C221 [illegible] C201, R224 to R221, R225 to R222. Revise Reduction [illegible] & Added GR. 2.
CN-Z517 3-25-76 [illegible]

Changed C103 Cap. from 120 PF to 220 PF @ C6. Changed C102 Cap. from .001 to 120 PF @ D3. [illegible] Resistor Now 47K for V4 & VT22 Models. R32 Resistor Now 4.7K for V4 & VT22 Models [illegible] F6. Added Alternate [illegible] Amp Slo-Blo Fuse for [illegible] VT22 Models @ P9. [illegible] (4) .47 Cap. @ N7. [illegible] Gr. 3 to Drawing.
CN-Z563 4-27-76 [illegible]

PARTS LIST:

SWITCHES	SW 303 & 305	160804-10
SWITCH	SW 302	160803-7
SWITCH	SW 301	160803-6
CONTROL	R103	220668-1
CONTROL	R104, 106, 107	220663-18
CONTROL	R105	220663-17
CONTROL	R108	220663-15
CONTROL	R109	220663-16
INDUCTOR	L1 (800 MH)	361604-3 GREEN
INDUCTOR	L2 (300 MH)	361604-2 ORANGE
INDUCTOR	L3 (100 MH)	361604-1 WHITE
DIODES 201-208	ALL (1 AMP 1000V)	530555-2

SIZE	PART NO.
5 3/16 x 8"	591761-3
5 3/16 x 8"	591761-2
7" x 10 13/16"	591761-1

ADDITIONAL SPECIFICATIONS

MATERIAL

FINISH

— TOLERANCES —
UNLESS OTHERWISE SPECIFIED

DECIMALS	± TOL.	FRACTIONS	± TOL.
.X	.050	UP TO 6	1/64
.XX	.005	6 TO 24	1/32
.XXX	.010	ABOVE 24	1/16

THREADS - CLASS 2 FIT AFTER PLATING; CONCENTRICITY .000 T.I.R.; MACHINE FINISHES 64 MICRO INCH MAX.; ANGULAR TOL. ± 1/2°
DIMENSIONS IN INCHES UNLESS OTHERWISE SPECIFIED ON DRAWING.
DO NOT SCALE DRAWING

THE AMPEG COMPANY
DIVISION OF THE MAGNAVOX COMPANY
P.O. BOX 345 LINDEN, N.J. 07036

SCHEMATIC V2 & VT40
(DISTORTION) V4 & VT22

DR. L. STROUD — DATE 2-6-76
ENG. [signature] — E-9-76
SIZE D — DWG. NO. 591761

THIS MATERIAL IS THE PROPERTY OF, AND PROPRIETARY TO, THE MAGNAVOX COMPANY AND IS NOT TO BE DISCLOSED TO OTHERS OR USED FOR OTHER THAN AUTHORIZED MAGNAVOX PURPOSES WITHOUT THE WRITTEN PERMISSION OF THE MAGNAVOX COMPANY. THIS MATERIAL