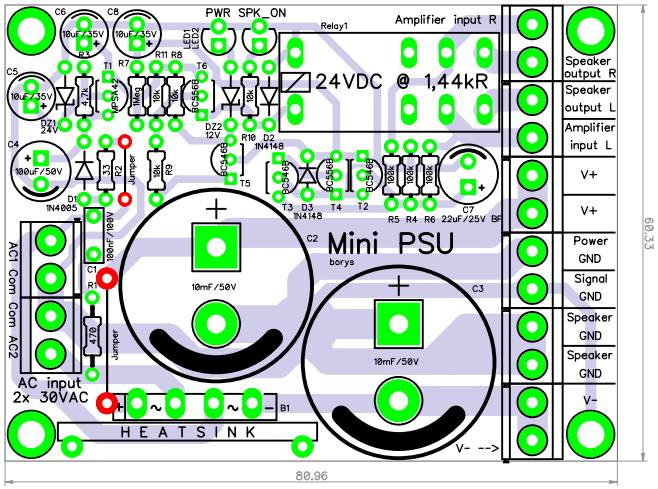
Mini PSU
borys
24VDC @ 1,44kR
Relay1
Amplifier input R
PWR SPK_ON
LED1
LED2
C6
C8
C5
C4
10uF/35V
100uF/50V
D1
1N4005
D2V
24V
DZ2
12V
DZ1
12V
R10 D2
1N4148
R7
R11 R8
T1
T6
T5
T3
T4
T2
D3
1N4148
BC546B
BC556B
R5 R4 R6
100k
22uF/25V
C7
BF
R2
R9
Jumper
R1
470
C1
100uF/100V
C2
10mF/50V
C3
10mF/50V
AC1 Com Com AC2
AC input
2x 30VAC
B1
HEATSINK
V- -->
Speaker output R
Speaker output L
Amplifier input L
V+
V+
Power GND
Signal GND
Speaker GND
Speaker GND
V-
80,96
60,33