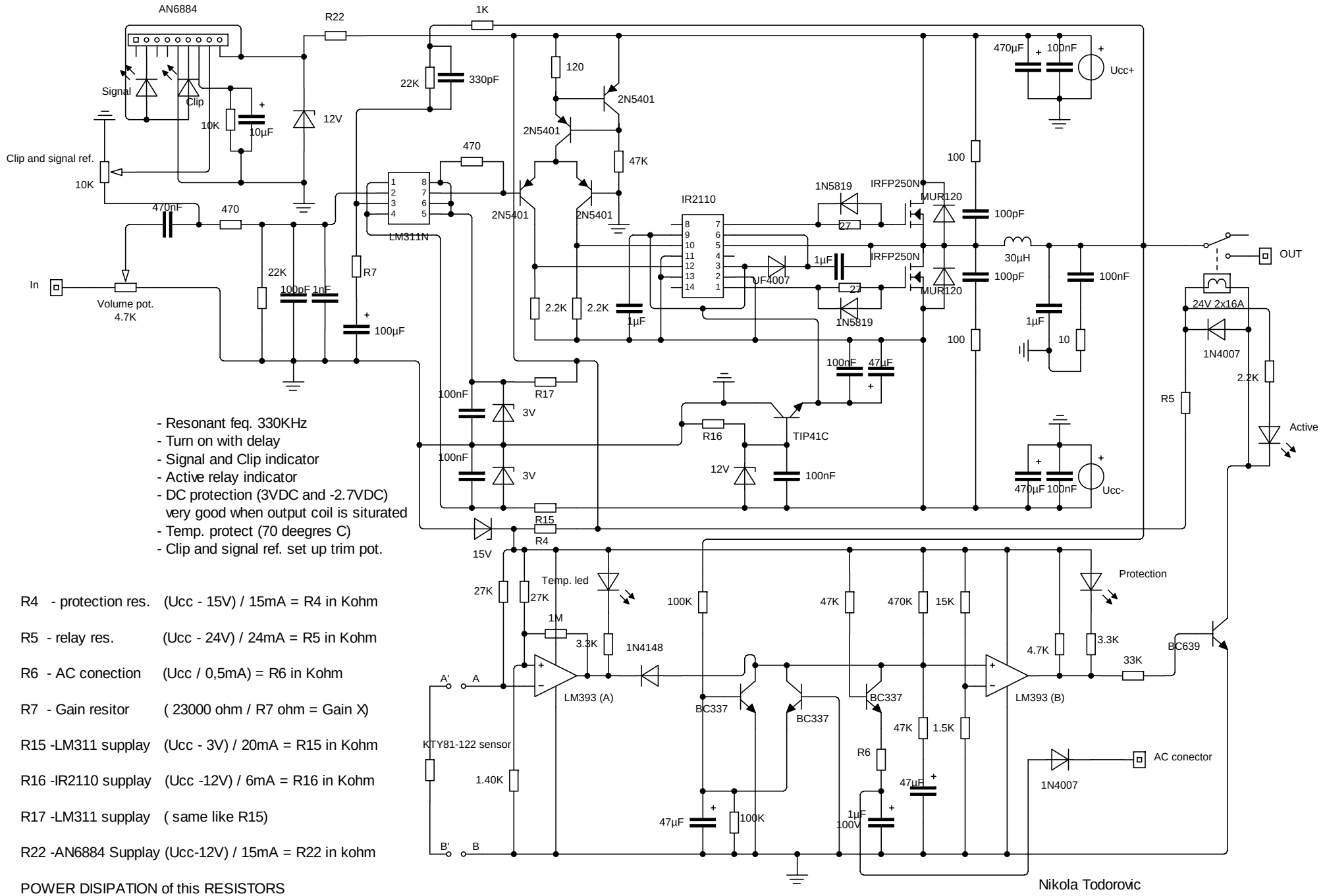

R4 - protection res. (Ucc - 15V) / 15mA = R4 in Kohm

R5 - relay res. (Ucc - 24V) / 24mA = R5 in Kohm

R6 - AC conection (Ucc / 0,5mA) = R6 in Kohm

R7 - Gain resitor (23000 ohm / R7 ohm = Gain X)

R15 -LM311 supplay (Ucc - 3V) / 20mA = R15 in Kohm

R16 -IR2110 supplay (Ucc -12V) / 6mA = R16 in Kohm

R17 -LM311 supplay (same like R15)

R22 -AN6884 Supplay (Ucc-12V) / 15mA = R22 in kohm

POWER DISIPATION of this RESISTORS

(Ucc - Voltage drop) * current in mA = power disipation in mW.

Nikola Todorovic
Dzony_988@hotmail.com