THIS DOCUMENT CONTAINS PROPRIETARY INFORMATION IS THE PROPERTY OF MONSTER PRO PRODUCTS, THAT MAY NOT BE DISCLOSED, REPRPDUCED OR USED WITHOUT EXPRESS WRITTEN CONSENT FROM MONTER PRO PRODUCTS.

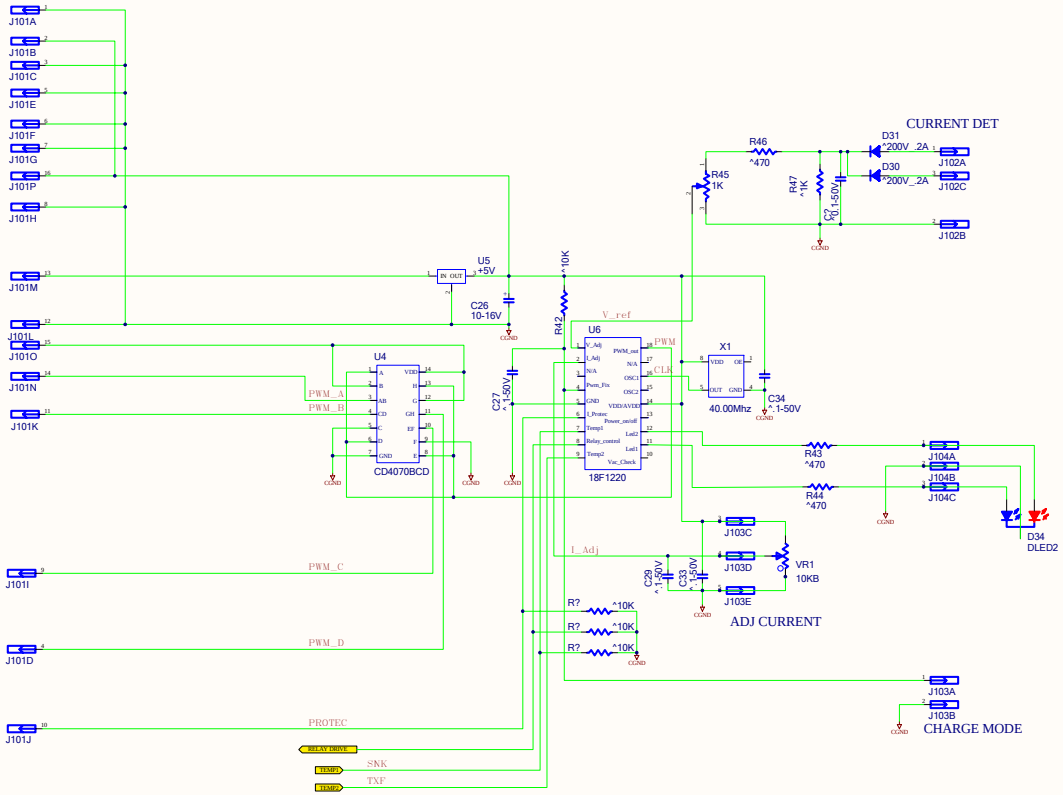

CONTROL FULL BRIDE PWM

Title	SWITCHCHING POWER SUPPLT CONTROL		
Size D	Number SH_000266_00_4		Revision 01
Date: 9/19/2005		Sheet of 4/4	
File: F:\MyBook\...\Control Bord.sch\doc		Drawn By: PRAJCHA	