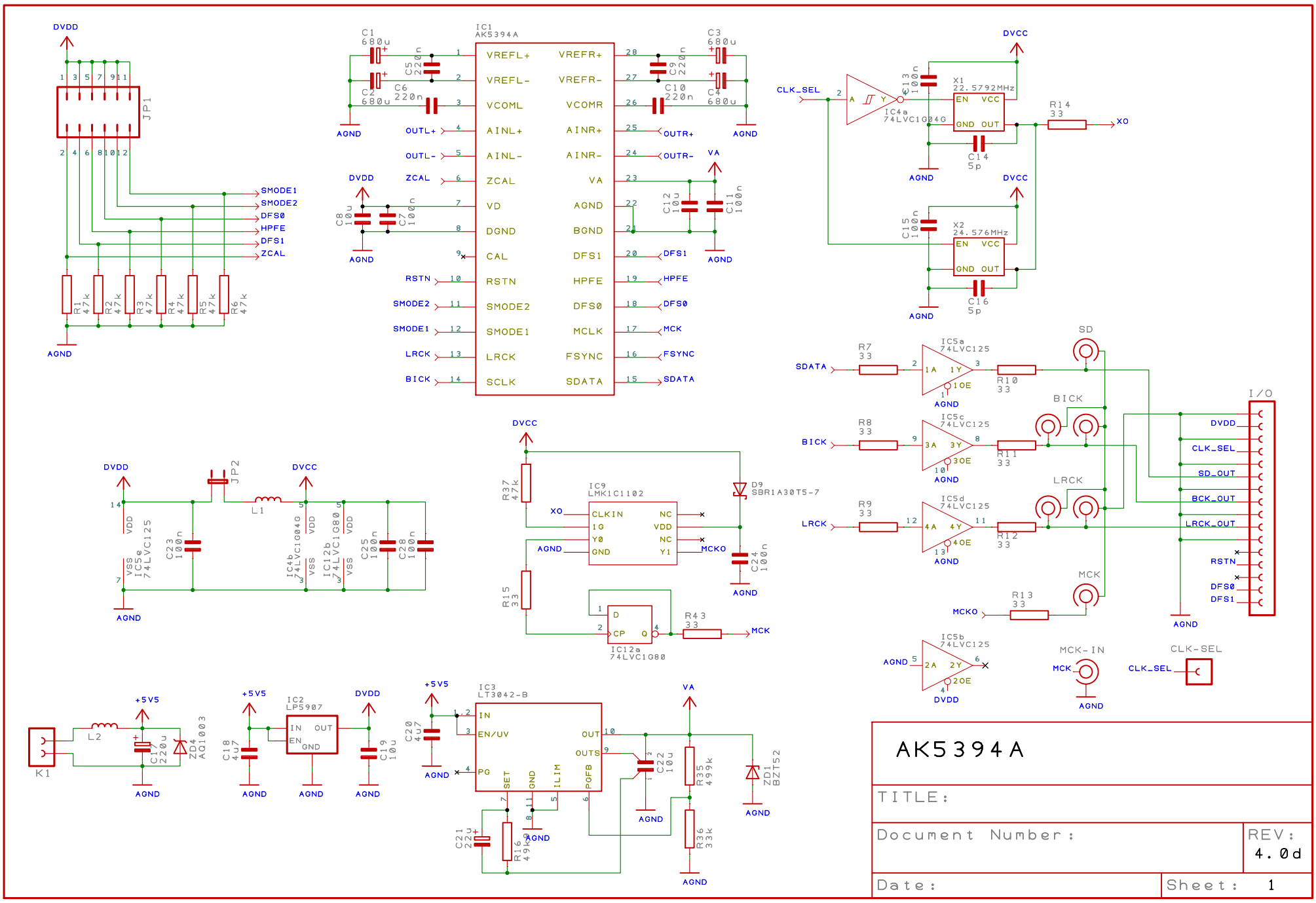

AK5394A

TITLE:

Document Number:

REV: 4.0d

Date:

Sheet: 1

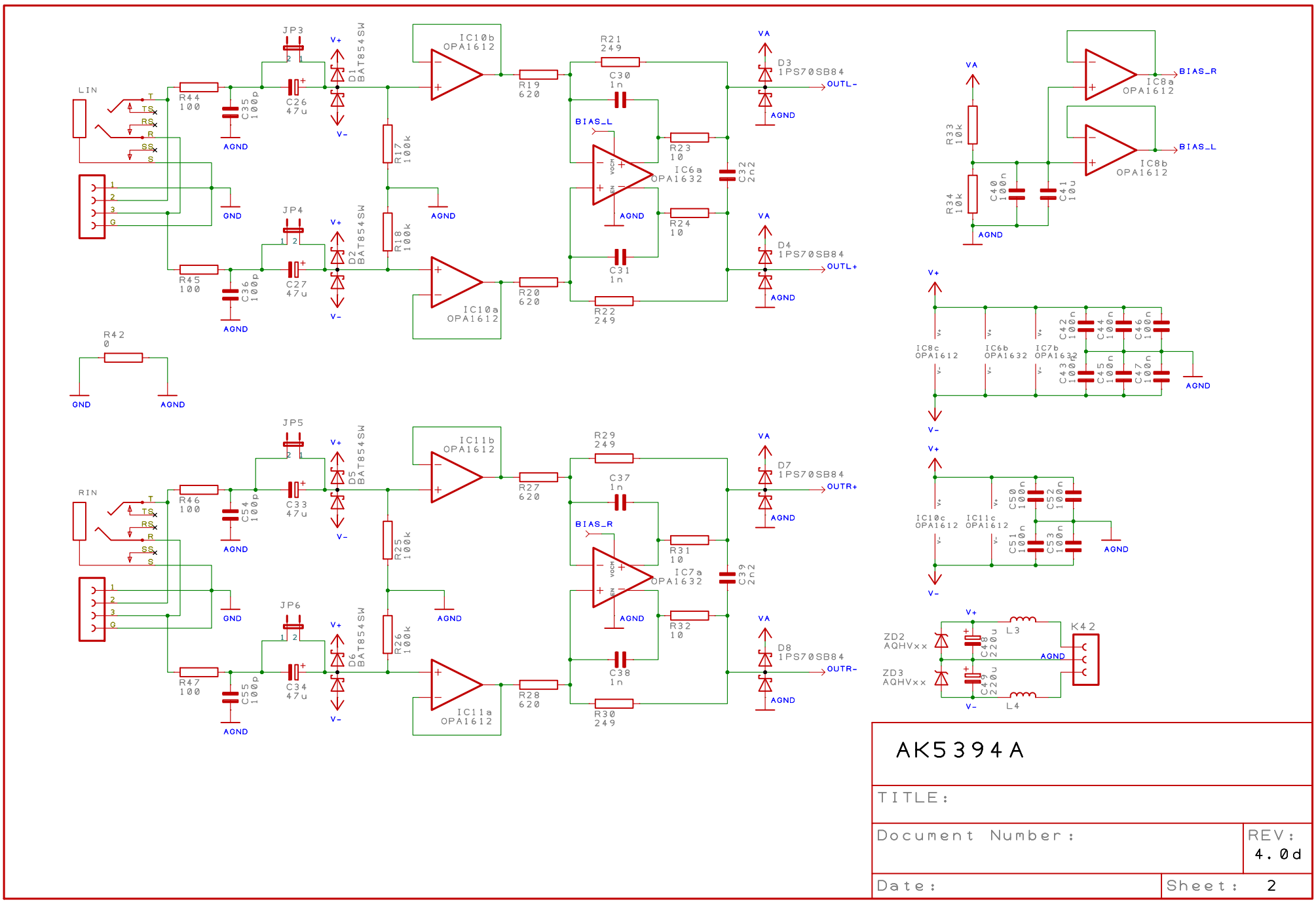

AK5394A

TITLE:

Document Number:

REV: 4.0d

Date:

Sheet: 2