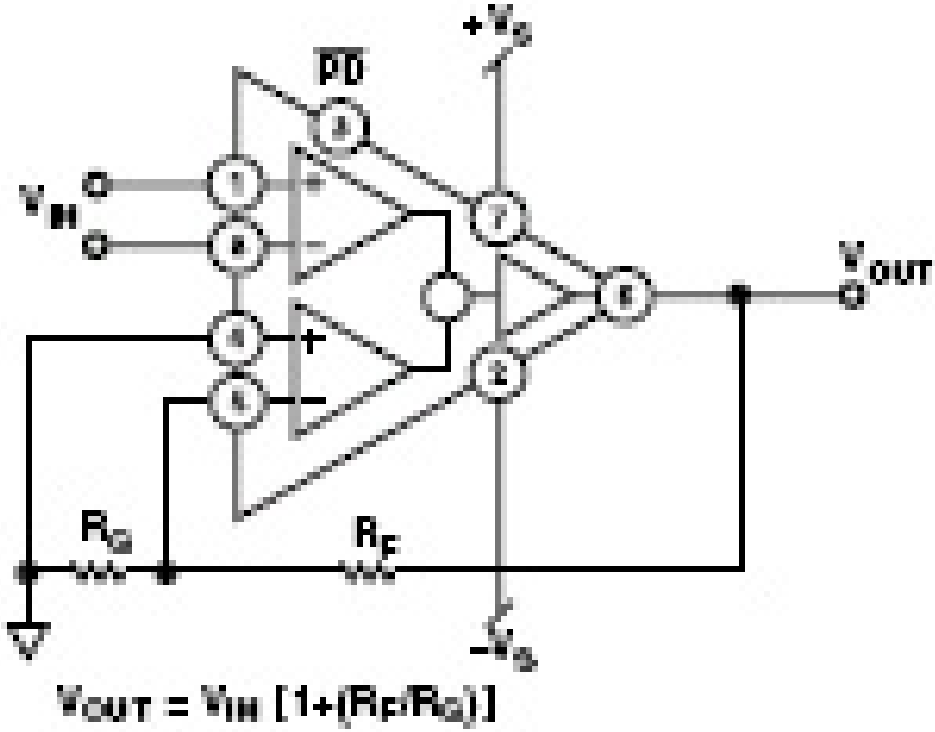


*Figure 2. Typical Connection Configuration*