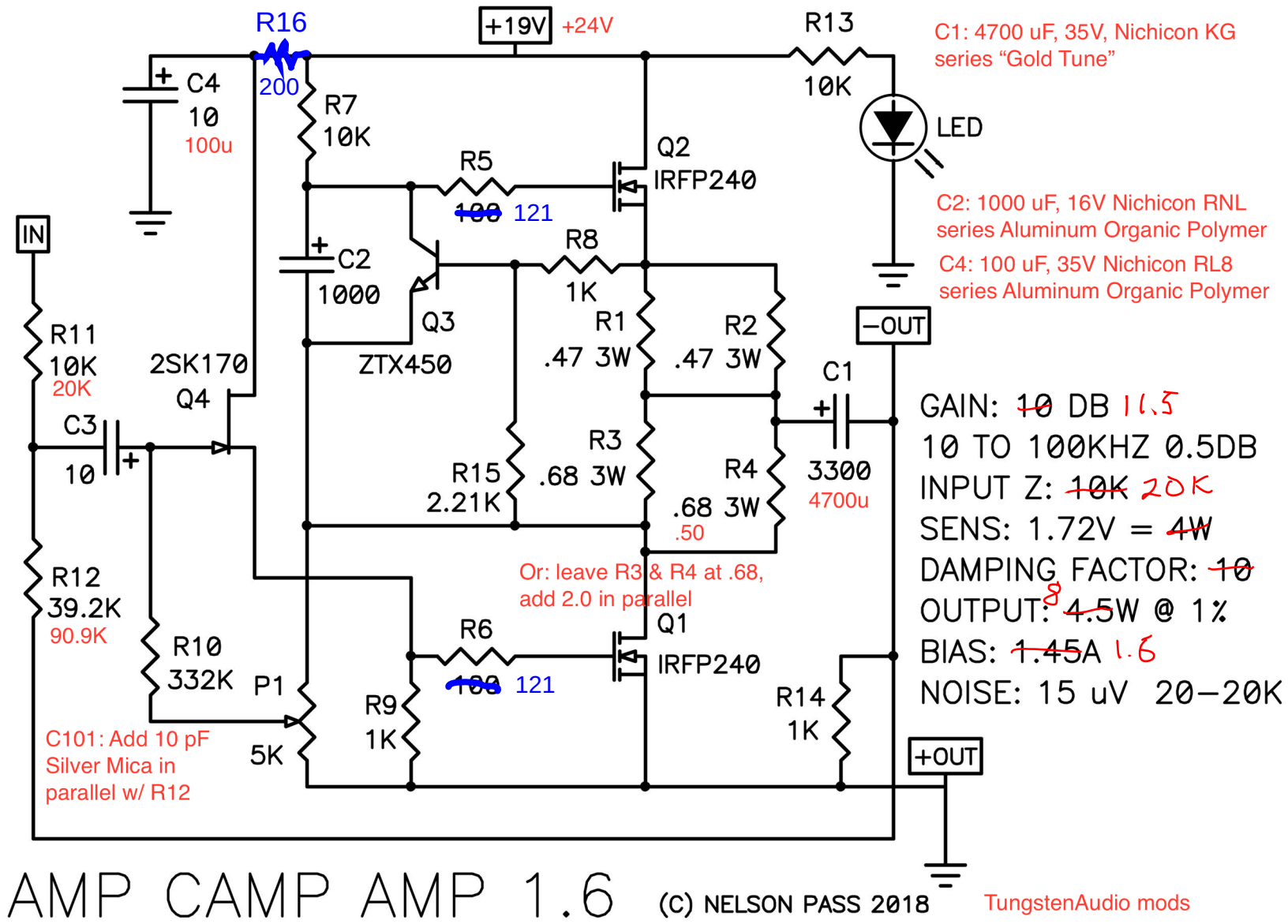
R16
200
+19V
+24V
R13
10K
C1: 4700 uF, 35V, Nichicon KG series "Gold Tune"
C4
10
100u
R7
10K
LED
R5
~~100~~ 121
Q2
IRFP240
C2: 1000 uF, 16V Nichicon RNL series Aluminum Organic Polymer
IN
C2
1000
R8
1K
C4: 100 uF, 35V Nichicon RL8 series Aluminum Organic Polymer
Q3
ZTX450
R1
.47 3W
R2
.47 3W
-OUT
R11
10K
20K
2SK170
Q4
C1
C3
10
R3
.68 3W
R4
.68 3W
.50
3300
4700u
R15
2.21K
GAIN: ~~10~~ DB 11.5
10 TO 100KHZ 0.5DB
INPUT Z: ~~10K~~ 20K
SENS: 1.72V = ~~4W~~
DAMPING FACTOR: ~~10~~
OUTPUT: ~~4.5~~W @ 1%
BIAS: ~~1.45~~A 1.6
NOISE: 15 uV 20-20K
Or: leave R3 & R4 at .68, add 2.0 in parallel
R12
39.2K
90.9K
R6
~~100~~ 121
Q1
IRFP240
R10
332K
P1
5K
R9
1K
R14
1K
C101: Add 10 pF Silver Mica in parallel w/ R12
+OUT
AMP CAMP AMP 1.6
(C) NELSON PASS 2018
TungstenAudio mods