PM 66 GM 16
70W/8Ohm, 1kHz -> 0.000447%
70W/8Ohm, 20kHz -> 0.005054%
SR 25
PSRR 1kHz -> 93

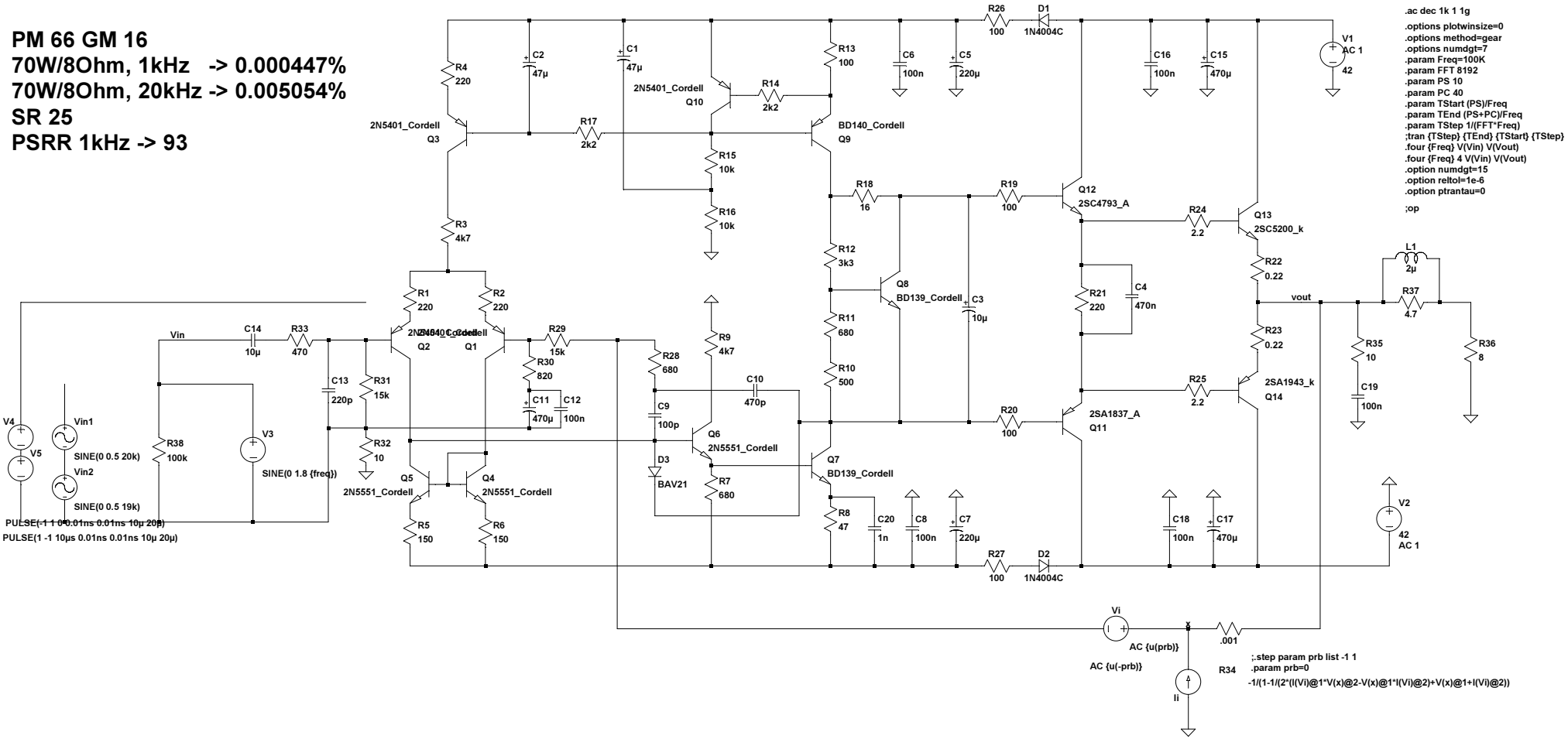

--- E:\LTSpice\abetirBL.asc ---