'Fermi' 459/565 pico Volts/rt Hz ; Isupply c. 20mA; distortion 0.01%
From Rod Elliot site based on a Douglas Self design.

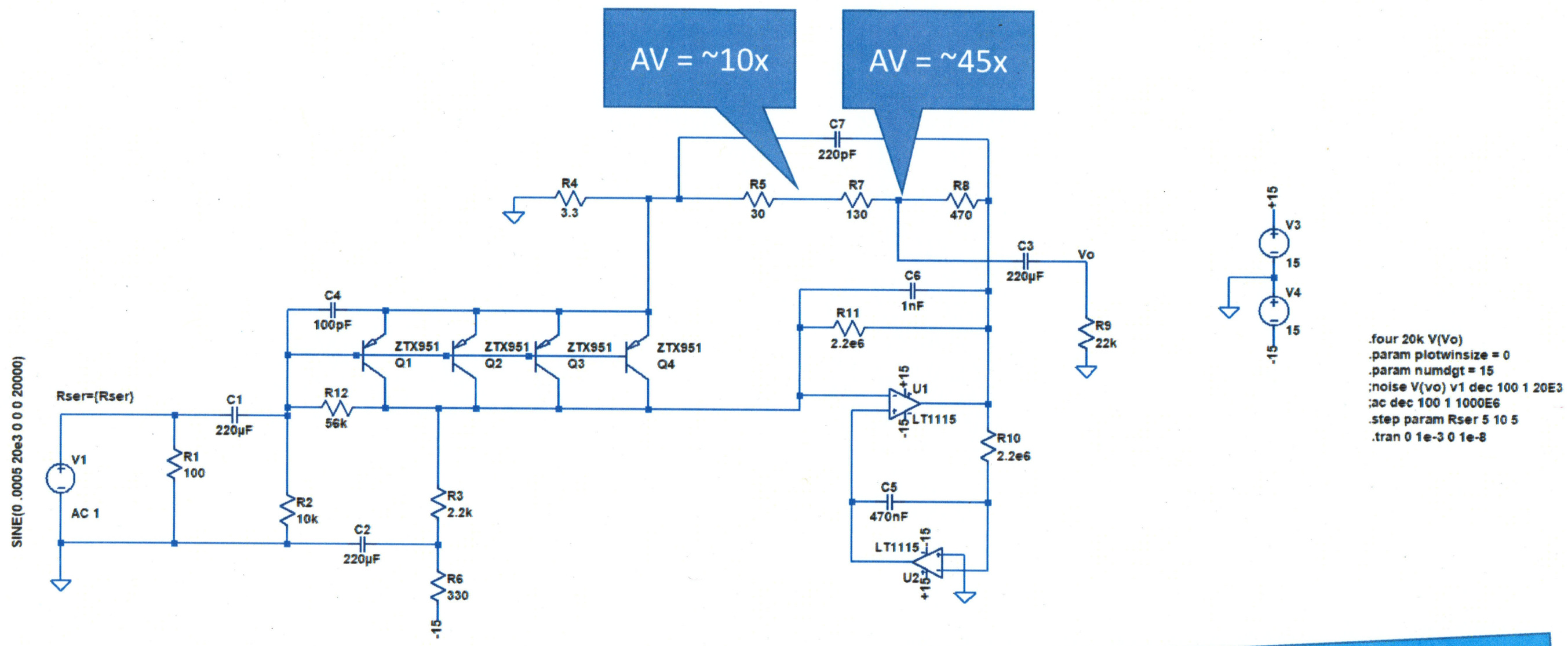

Complex but performance is good. Match Q1-Q4 Vbe for best performance to within 1mV. Adjust C6 to optimize loop and frequency response.

https://en.wikipedia.org/wiki/Enrico_Fermi