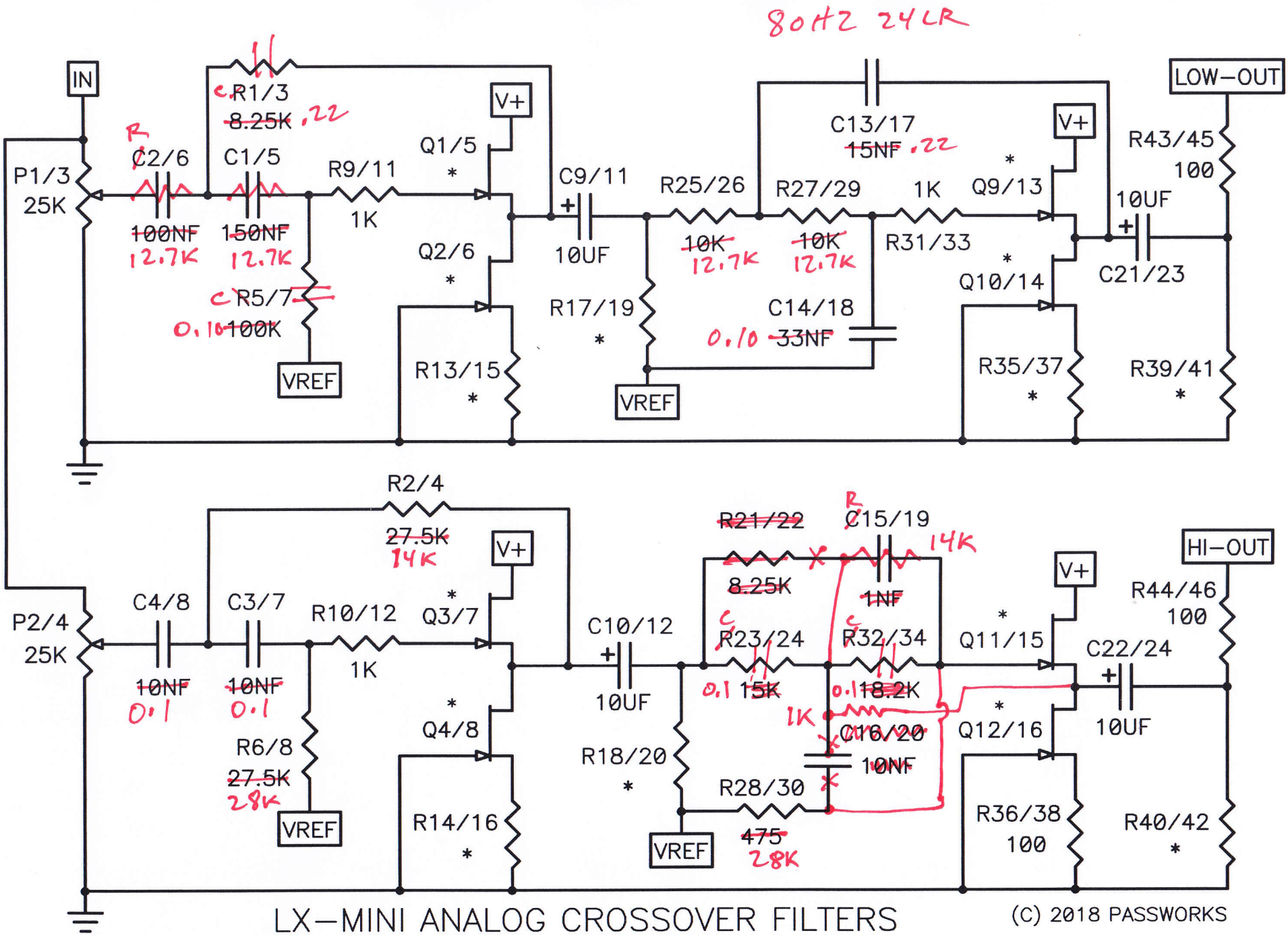

LX-MINI ANALOG CROSSOVER FILTERS

(C) 2018 PASSWORKS

PART NUMBERS: LEFT CH / RIGHT CH All JFETS SELECTED AND MATCHED

RESISTORS 13 – 20, 35 – 42 VALUE SPECIFIC TO JFET SELECTION