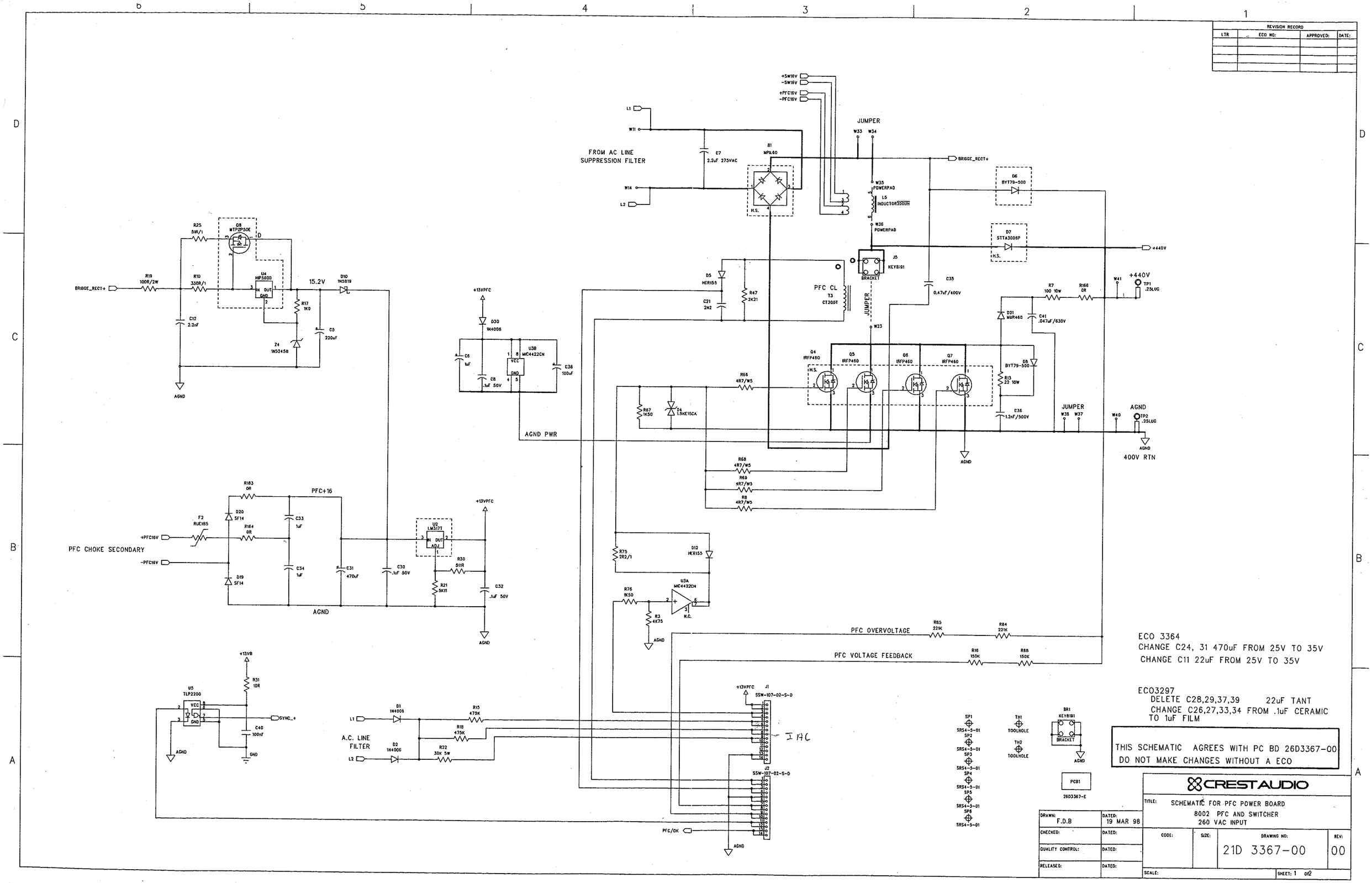

ECO 3364
CHANGE C24, 31 470uF FROM 25V TO 35V
CHANGE C11 22uF FROM 25V TO 35V

ECO3297
DELETE C28,29,37,39 22uF TANT
CHANGE C26,27,33,34 FROM .1uF CERAMIC TO 1uF FILM

THIS SCHEMATIC AGREES WITH PC BD 26D3367-00
DO NOT MAKE CHANGES WITHOUT A ECO

REVISION RECORD			
LTR	ECO NO:	APPROVED:	DATE:

CRESTAUDIO

TITLE: SCHEMATIC FOR PFC POWER BOARD
8002 PFC AND SWITCHER
260 VAC INPUT

DRAWN: F.D.B	DATED: 19 MAR 98	CODE:	SIZE:	DRAWING NO: 21D 3367-00	REV: 00
CHECKED:	DATED:				
QUALITY CONTROL:	DATED:				
RELEASED:	DATED:	SCALE:		SHEET: 1 of 2	

REVISION RECORD			
LTR	ECO NO:	APPROVED:	DATE:

DRIVE_B
DRIVE_A
U12A MIC4424CN
U12B MIC4424CN
+13VBX
D26 1N5819
D25 1N5819
D34 1N5819
D27 1N5819
R28 4K75
GND
C19 4.7nF/35V
T2 97-0271-1
D36 HER155
D38 HER155
R4 4R7
R26 4R7
R32 4R7
R27 4R7
R23 1K50
R24 1K50
C20 2N2/100V
C22 2N2/100V
D9 1.5KE15CA
D11 1.5KE15CA
R101 475R
R102 475R
Q10 IRG4PC50UD
Q11 IRG4PC50UD
H.S.
AGND
C57 1.2nF/500V
C56 1.2nF/500V
USE 2 PIN AND 4 PIN DECAL
C118 2200uF 230V
C119 2200uF 230V
C120 1.5uF
C121 1.5uF
R161 56K/2
R162 56K/2
+440V
+220V
AGND
W21
JUMPER
J8 KEY8191 BRACKET
SW PS CL T4 CT200T
D3 1N4148
D15 1N4148
D13 1N4148
D16 1N4148
R1 100
R2 37R4
R5 37R4
R9 37R4
C1 2N2
C2 1nF
CURRENT_LIMIT

SW REG SUPPLY/A
+SW16V
-SW16V
F1 RUE185
D17 SF14
D18 SF14
C26 1uF
C27 1uF
C23 .1uF 50V
C24 47uF
U1 LM317T
IN OUT ADJ
R20 511R
R14 4K75
C25 .1uF 50V
+13VB
D22 HER155
GND
TO FAN POWER SUPPLY
J4
SW+16
D14 SF14
C11 10uF/35V
T1 RESONANT TRANSFORMER 260V
C55 0.47uF/400V
C54 0.22uF/400V
+220V
NC
RED
GRN
BLUE
W39 22GA
W13 14GA
W32 22GA
W12 14GA
TO CHASSIS GND
L6 0.2UH
L7 0.2UH
L8 0.2UH
L9 0.2UH
B3 BRUS720
B4 BRUS720
C42 1000uF 160V
C43 1000uF 160V
C9 2700uF 80V
C10 2700uF 80V
C13 2700uF 80V
C14 2700uF 80V
L1 0.2UH
L2 5UH
L3 5UH
L4 0.2UH
R11 150K
FEEDBACK
C15 0.1UF
C17 .1UF
C18 .1UF
C16 0.1UF
+120V W1 W2 + HIGH RAIL
+60V W3 W4 + LOW RAIL
W5 GND W6 GND
-60V W7 W8 - LOW RAIL
-120V W9 W10 - HIGH RAIL

U6 H11A1
CURRENT_LIMIT
PFC_OK+
DRIVE_A
DRIVE_B
OTEMP
FEEDBACK
SYNC_+
AGND
PFC/OK
J3 SSW-110-02-S-D
U12C MIC4424CN
VCC
R12 4R7
C3 1uF
C4 .1uF 50V
1SW1 67F075-H
OVER TEMP

DRAWN: F.D.B.	DATED: 19 MAR 98	CRESTAUDIO	
CHECKED:	DATED:	TITLE: SCHEMATIC FOR PFC POWER BOARD 8002 PFC AND SWITCHER 260 VAC INPUT	
QUALITY CONTRDL:	DATED:	CODE:	SIZE:
RELEASED:	DATED:	DRAWING NO: 21D 3367-00	REV: 00
		SCALE:	SHEET: 2 OF 2