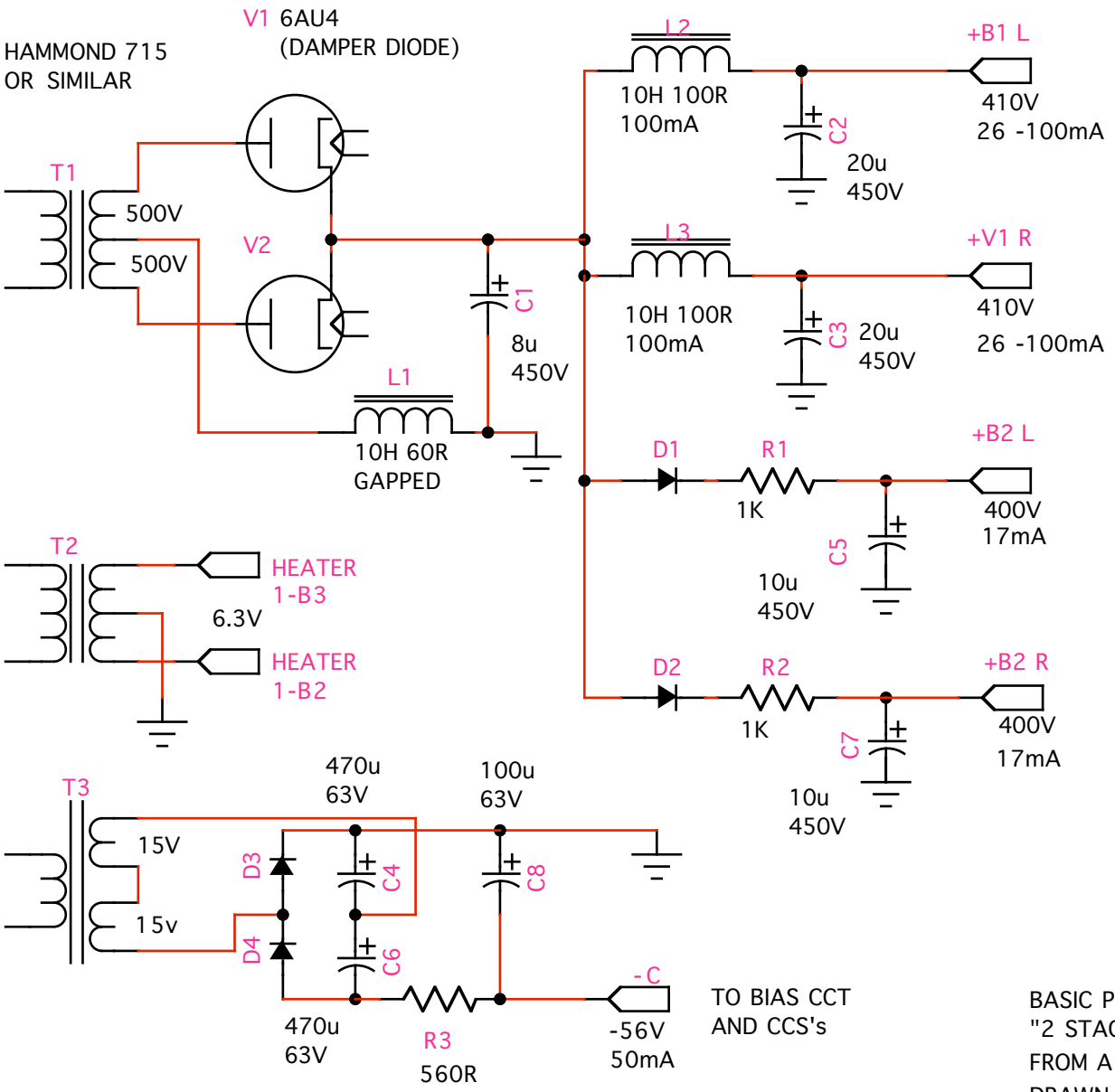

BASIC POWER SUPPLY FOR
"2 STAGE" PP 7591 INTEGRATED AMP
FROM A CONCEPT BY ELI DUTTMAN
DRAWN BY DHAEN DEC 2005 REV1.1