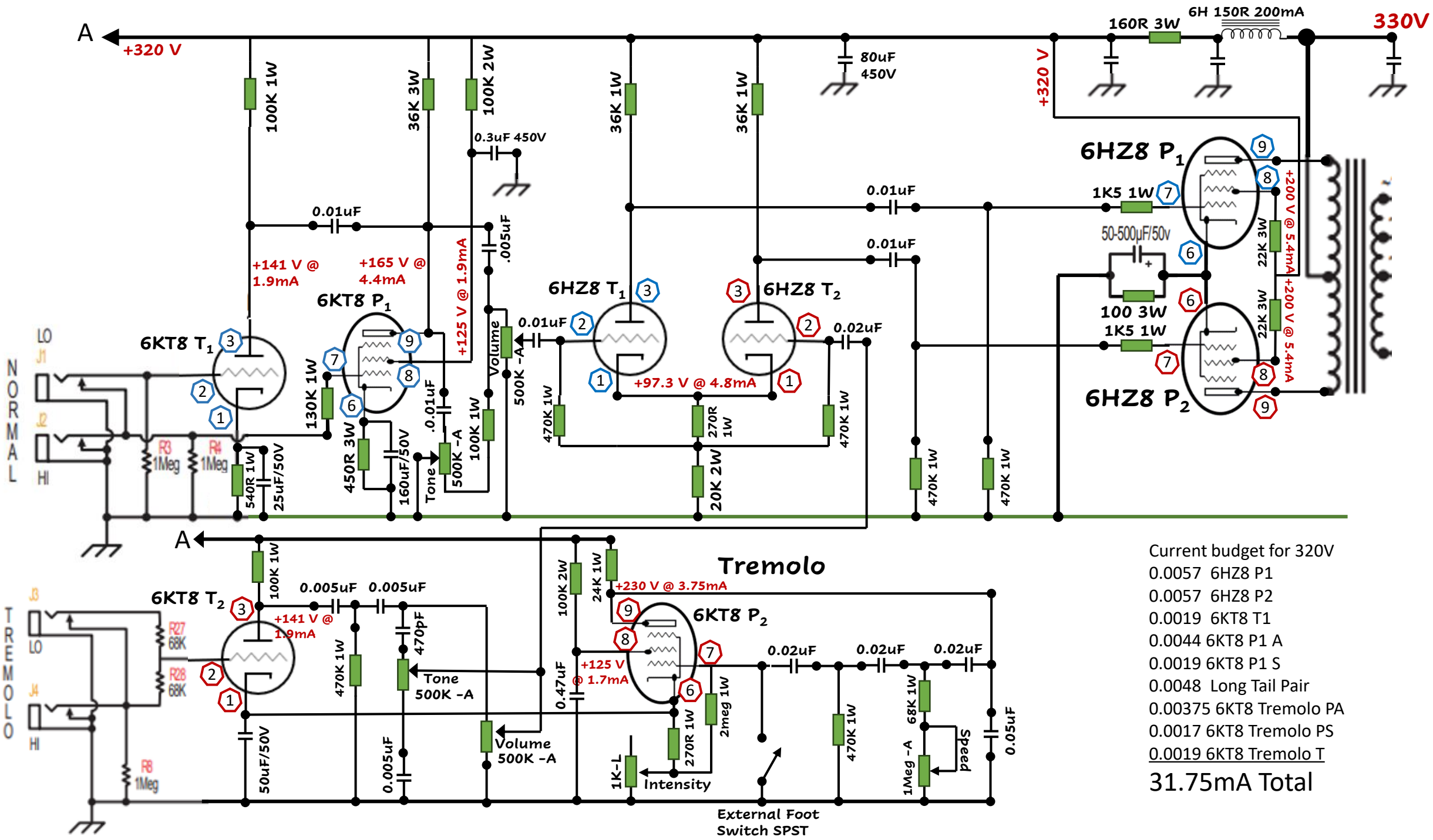

Current budget for 320V
0.0057 6HZ8 P1
0.0057 6HZ8 P2
0.0019 6KT8 T1
0.0044 6KT8 P1 A
0.0019 6KT8 P1 S
0.0048 Long Tail Pair
0.00375 6KT8 Tremolo PA
0.0017 6KT8 Tremolo PS
0.0019 6KT8 Tremolo T

31.75mA Total