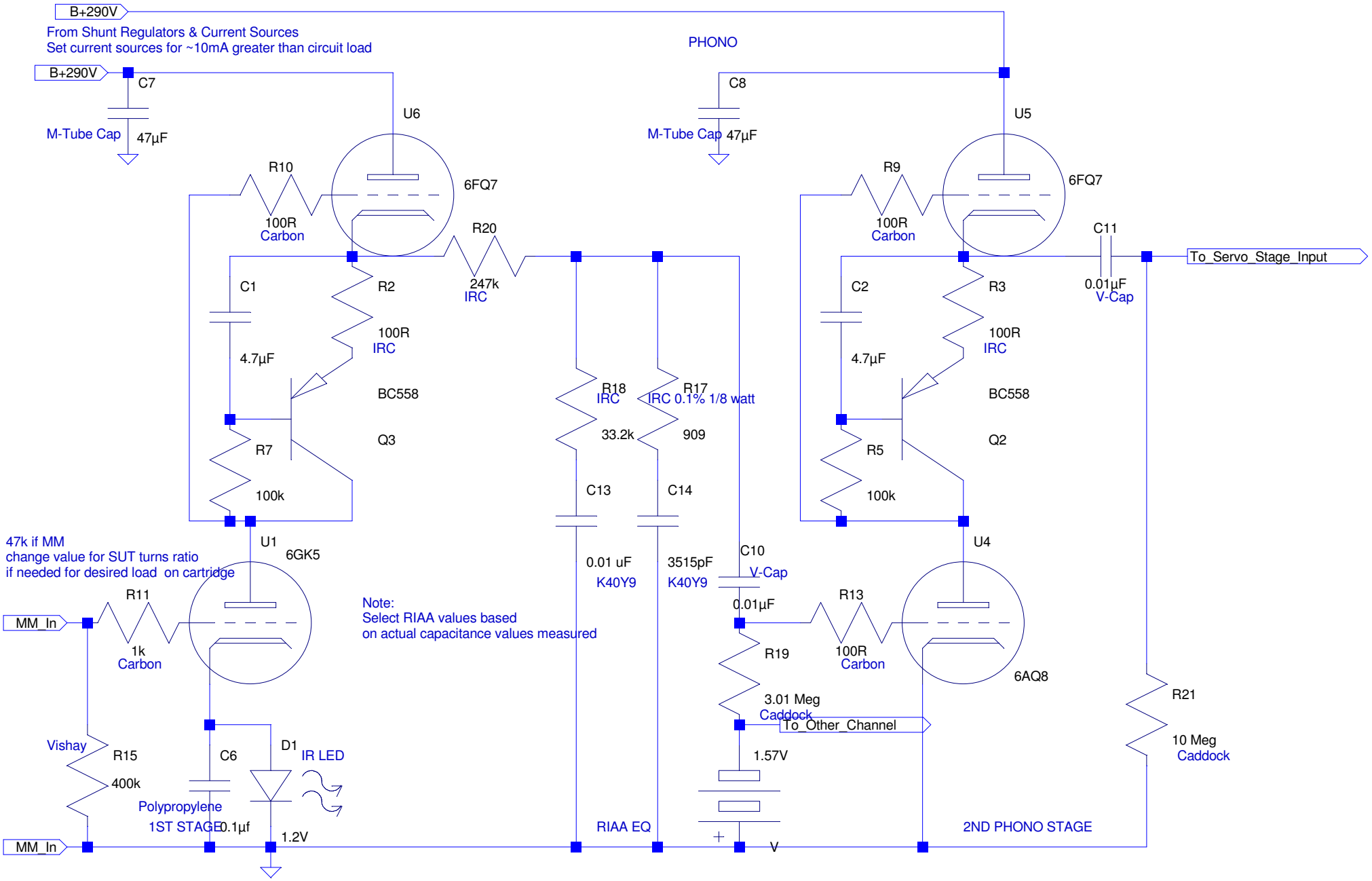

--- C:\Sepfile\Electronics\Projects\Preamps\Other Ideas\6GK5-6AQ8-Battery-Beta-Follower.asc ---