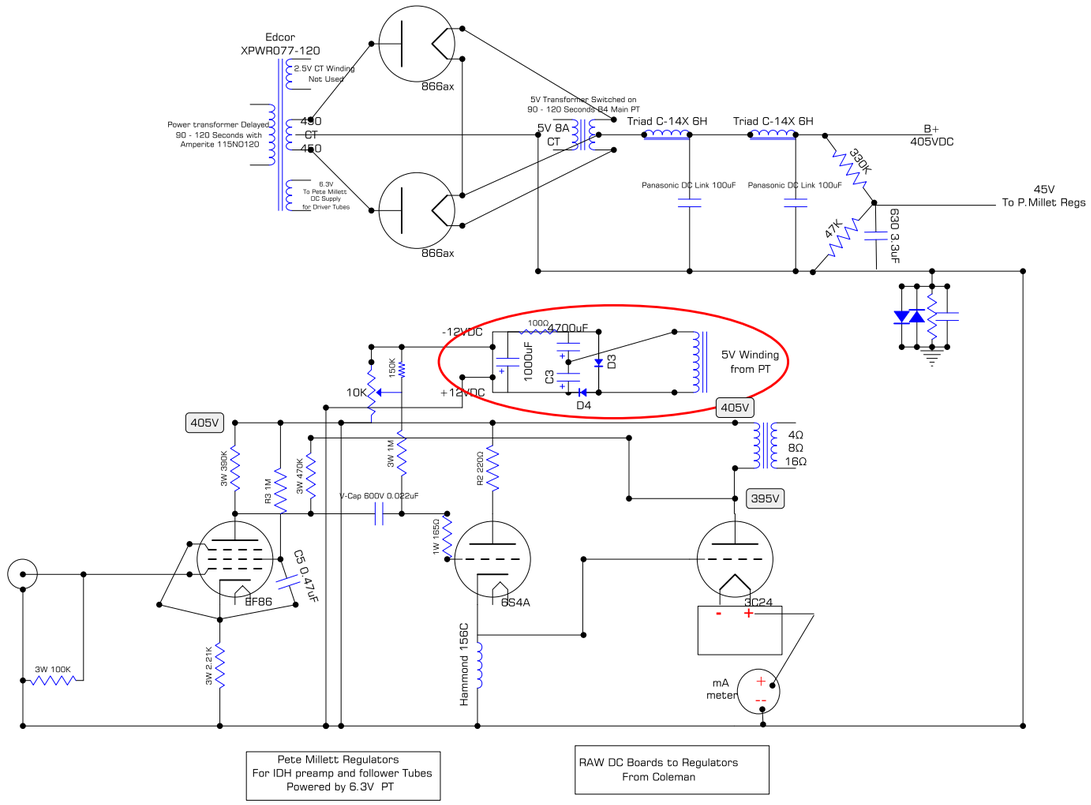
Edcor
XPWR077-120
2.5V CT Winding
Not Used
Power transformer Delayed
90 - 120 Seconds with
Amperite 115N0120
450
CT
450
6.3V
To Pete Millett
DC Supply
for Driver Tubes
866ax
866ax
5V Transformer Switched on
90 - 120 Seconds by Main PT
5V 8A
CT
Triad C-14X 6H
Triad C-14X 6H
B+
405VDC
330K
Panasonic DC Link 100uF
Panasonic DC Link 100uF
45V
To P.Millet Regs
47K
630 0.3uF
-12VDC
1000
4700uF
1000uF
C3
D3
D4
5V Winding
from PT
+12VDC
10K
150K
1W
405V
405V
4Ω
8Ω
16Ω
3W 390K
R3 1M
3W 470K
9W 1M
R2 220Ω
V-Cap 600V 0.022uF
395V
1W 150Ω
C5 0.47uF
6F86
6S4A
6C24
3W 100K
3W 2.31K
Hammond 15GC
mA
meter
Pete Millett Regulators
For IDH preamp and follower Tubes
Powered by 6.3V PT
RAW DC Boards to Regulators
From Coleman