DRAWING No.
*

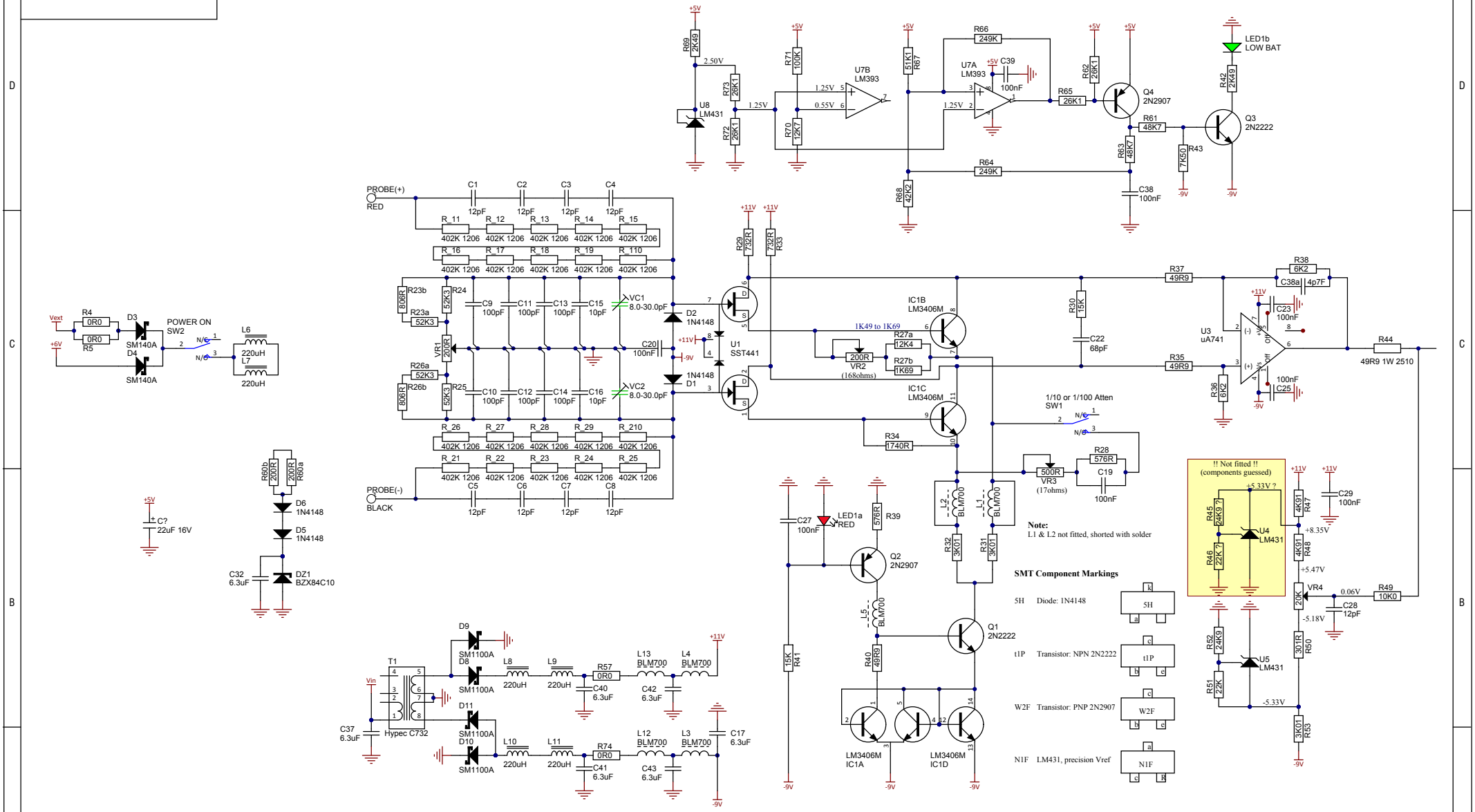

Note:
Capacitors removed & measured using Peak Tech 2155 LCR Meter

APPROVED		
*	Phoenix Designz	THIS DRAWING AND ANY INFORMATION OR DESCRIPTIVE MATTER SET OUT HEREON ARE THE CONFIDENTIAL AND COPYRIGHT PROPERTY OF PHOENIX DESIGNZ AND MUST NOT BE DISCLOSED, LOANED, COPIED OR USED FOR MANUFACTURING, TENDERING OR ANY OTHER PURPOSE WITHOUT WRITTEN PERMISSION.
CHECKED *	www.PhoenixDesignz.com	
DRAWN Andy Lewis		

ISS	DATE	CH/No.	REVISION DETAILS	NAME
			v1.1b	

TITLE **Differential Probe SMT: 25MHz 1KV**

SIZE **A3**

DRAWING No. *

Sheet 1 of 1 .