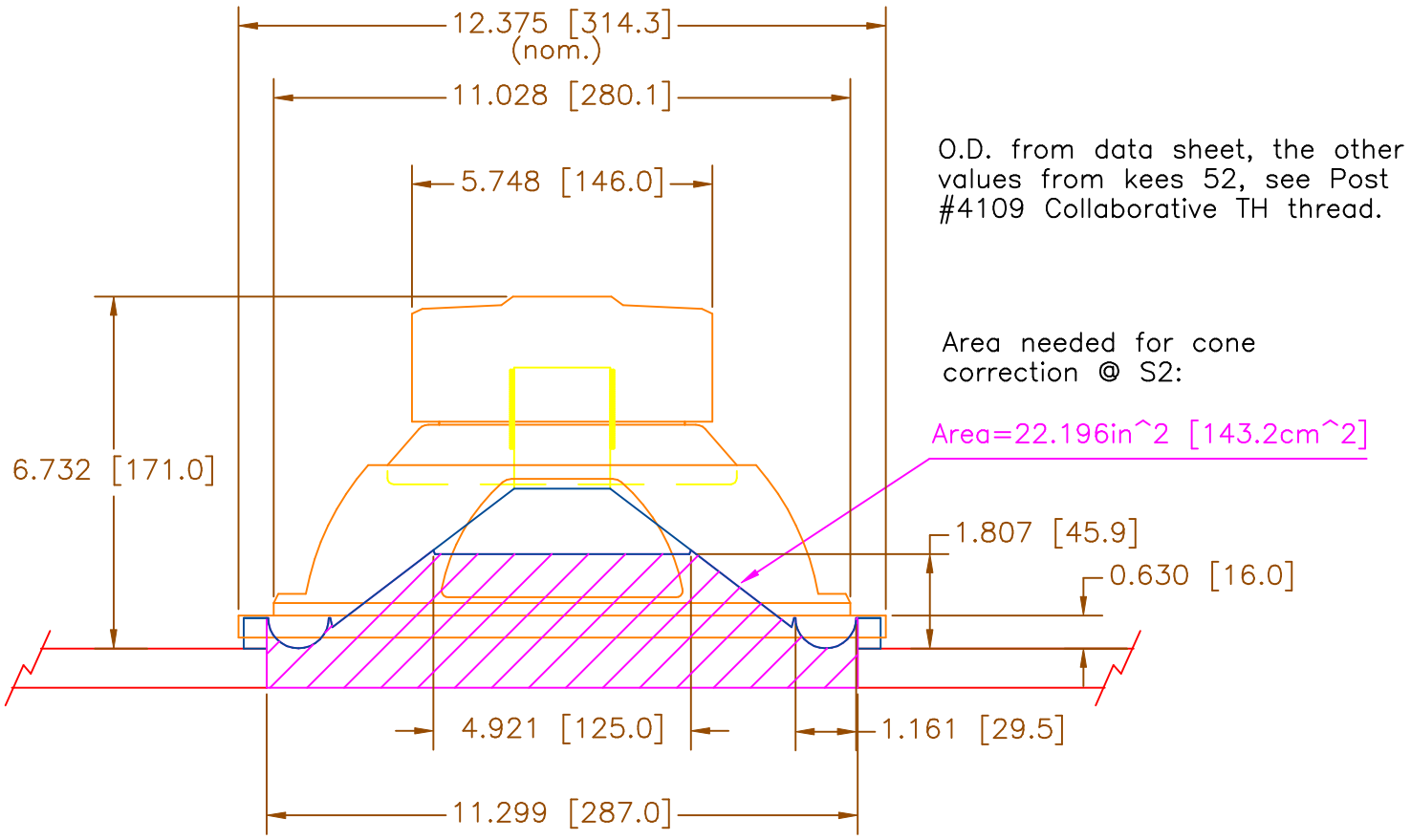

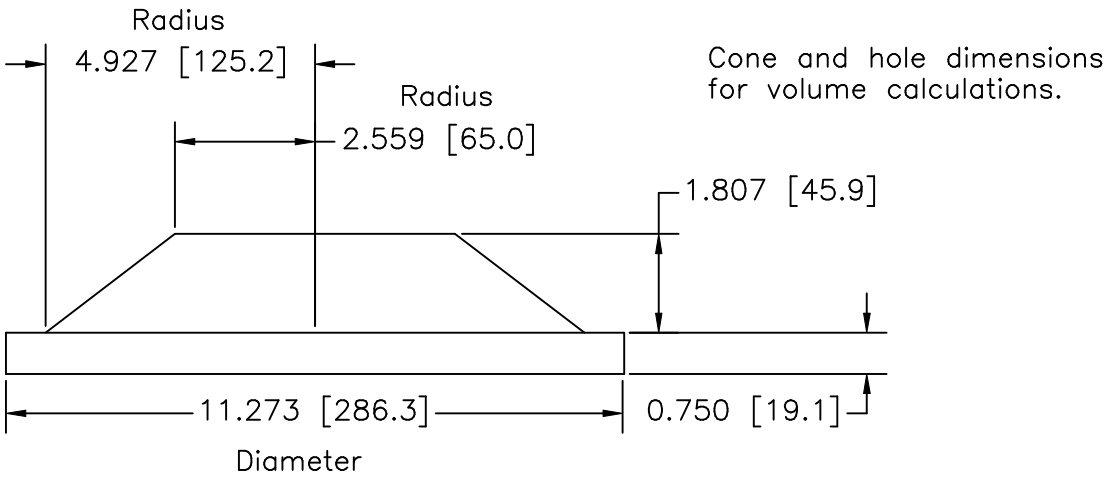

Infinity_1260W_Side_dims_kees52.dwg