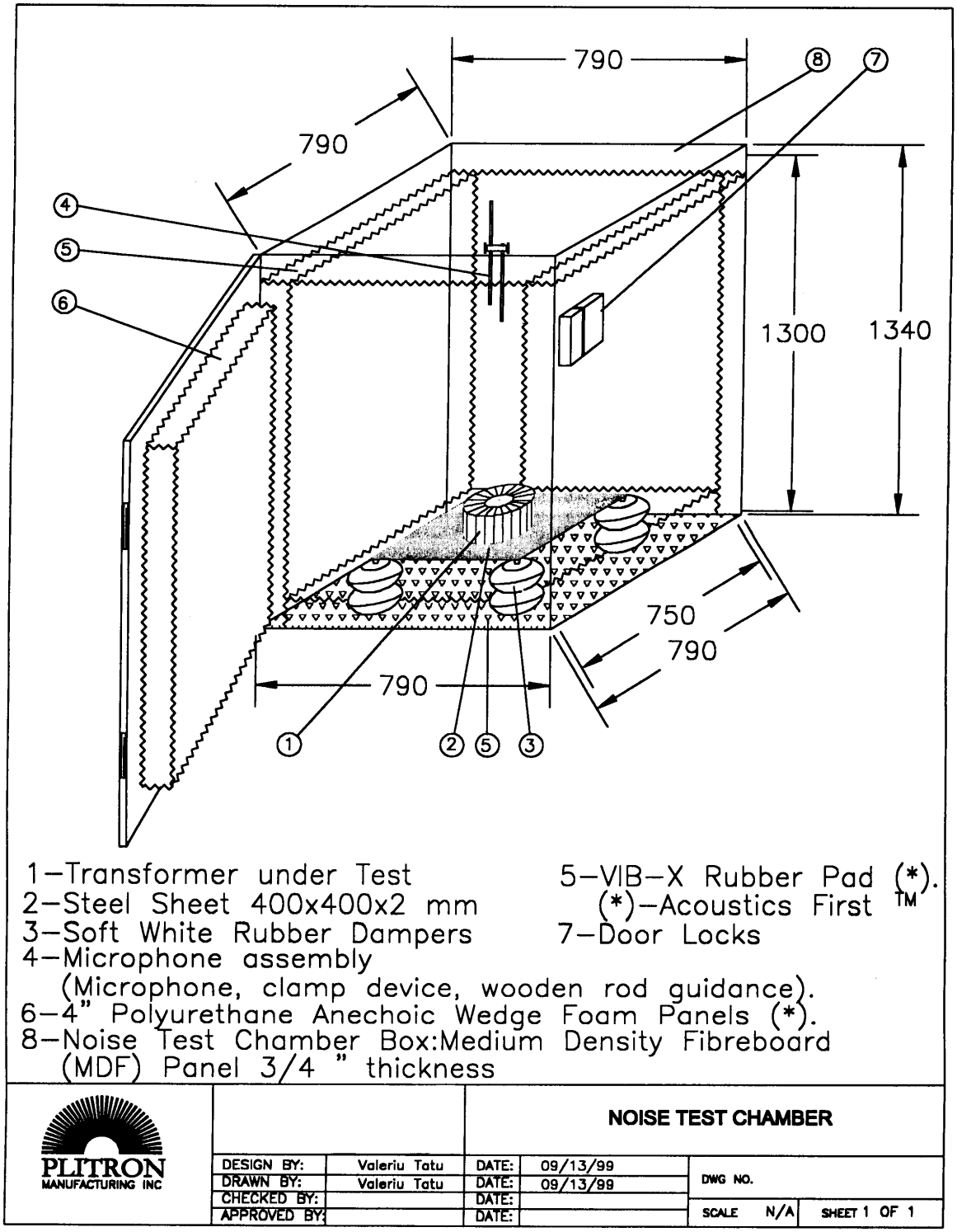

Figure 6: Drawing of the Noise Test Chamber