PREV

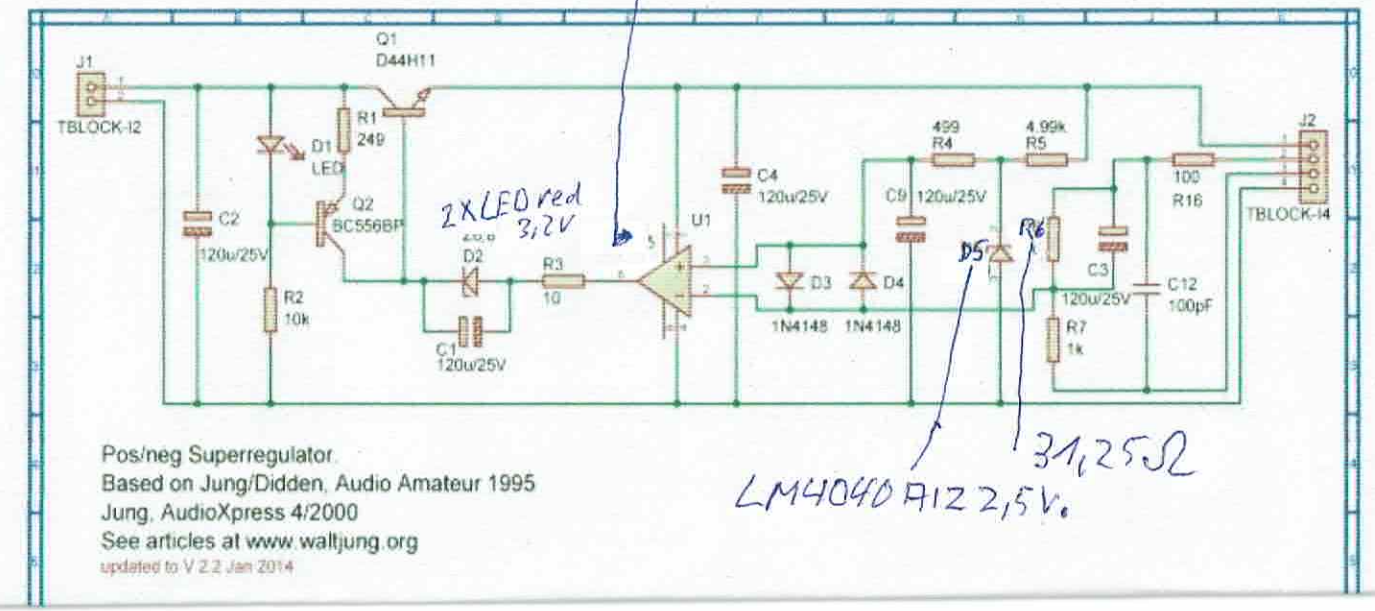
MCP6021-I/P
J1
TBLOCK-I2
Q1
D44H11
R1
249
D1
LED
Q2
BC556BP
C2
120u/25V
R2
10k
2XLED red
3,2V
D2
R3
10
C1
120u/25V
U1
C4
120u/25V
D3
D4
1N4148
1N4148
499
R4
4.99k
R5
C9
120u/25V
D5
R6
C3
120u/25V
R7
1k
100
R16
C12
100pF
J2
TBLOCK-I4
Pos/neg Superregulator.
Based on Jung/Didden, Audio Amateur 1995
Jung, AudioXpress 4/2000
See articles at www.waltjung.org
updated to V 2.2 Jan 2014
LM4040 A1Z 2,5V.
31,25Ω