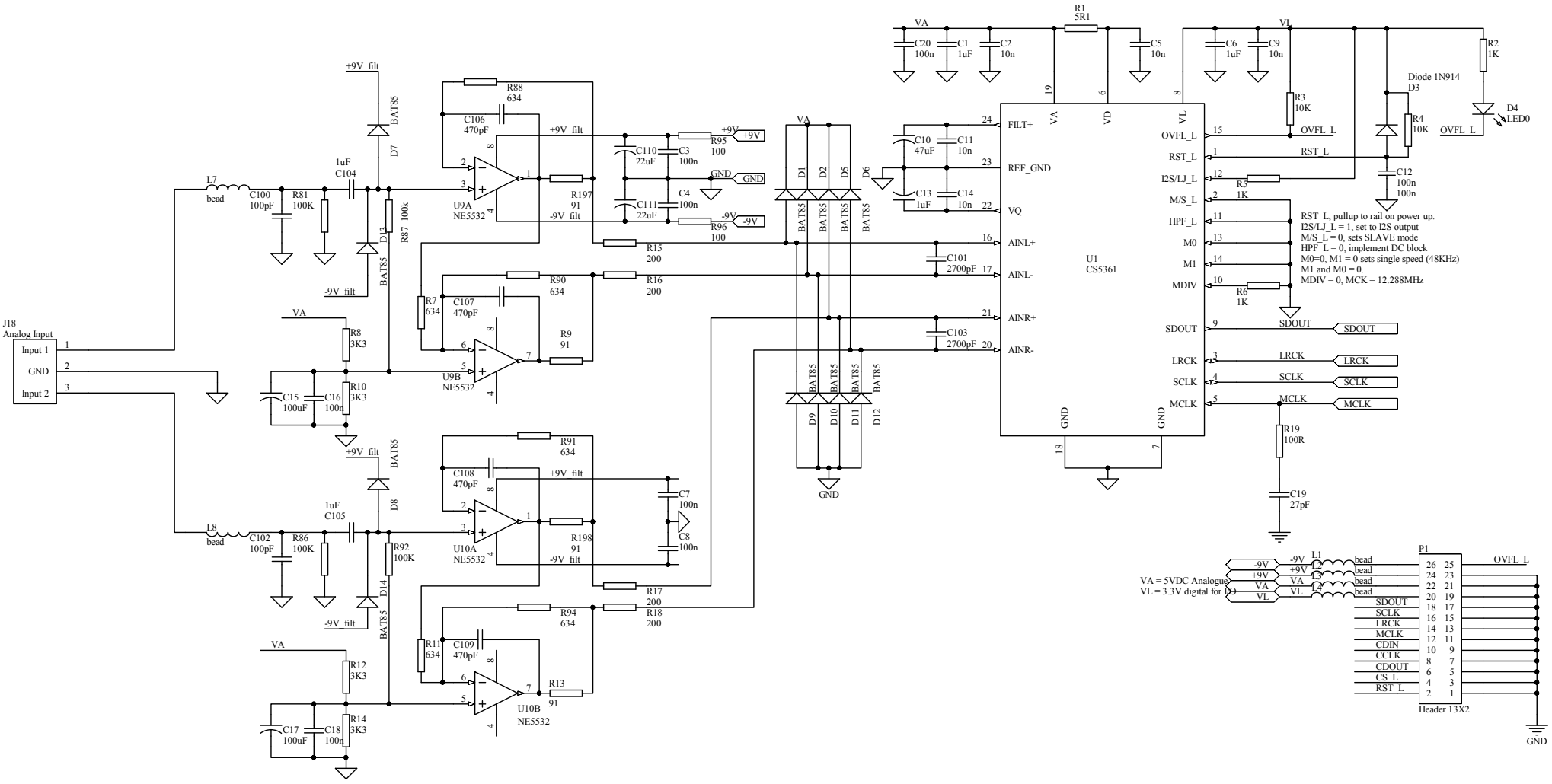

Title	ADC Board- CS5361 or 5681	
Size A3	Number Digital_XO_2011	Revision V27
Date: 11/20/2012		Sheet 1of 1
File: C:\Users\..\Input Buffers.Sch		Drawn By: