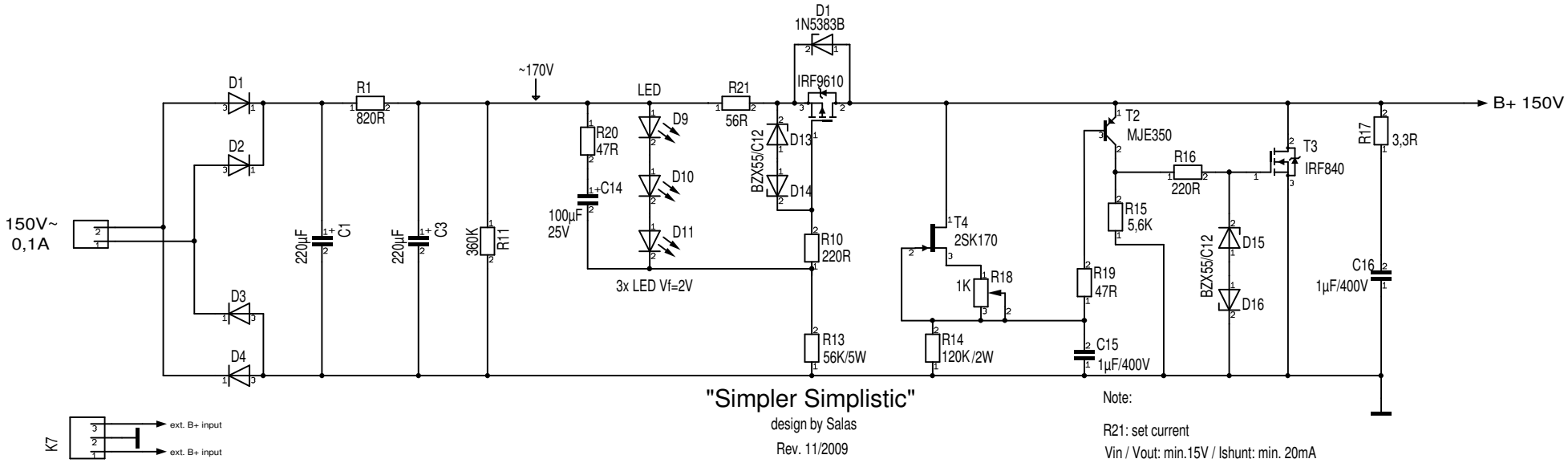
D1
1N5383B
~170V
D1
R1
820R
LED
R21
56R
IRF9610
B+ 150V
D2
R20
47R
D9
D13
T2
MJE350
R16
220R
T3
IRF840
R17
3,3R
D10
BZX55/C12
D14
150V~
0,1A
220µF
C1
220µF
C3
360K
R11
C14
100µF
25V
D11
R10
220R
T4
2SK170
R15
5,6K
D15
C16
1µF/400V
3x LED Vf=2V
1K
R18
R19
47R
BZX55/C12
D16
D3
R13
56K/5W
R14
120K/2W
C15
1µF/400V
D4
"Simpler Simplistic"
design by Salas
Rev. 11/2009
Note:
R21: set current
Vin / Vout: min.15V / Ishunt: min. 20mA
K7
ext. B+ input
ext. B+ input

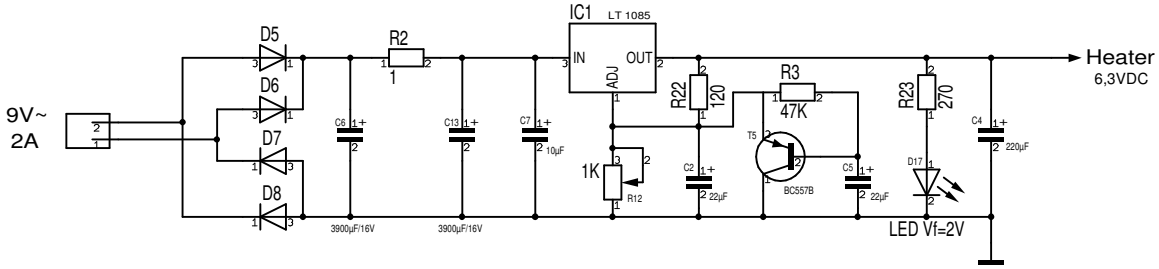
IC1
LT 1085
D5
R2
1
IN
OUT
ADJ
Heater
6,3VDC
D6
R22
120
R3
47K
R23
270
9V~
2A
C6
C13
C7
10µF
T5
C4
220µF
D7
1K
R12
C2
22µF
BC557B
C5
22µF
D17
D8
3900µF/16V
3900µF/16V
LED Vf=2V

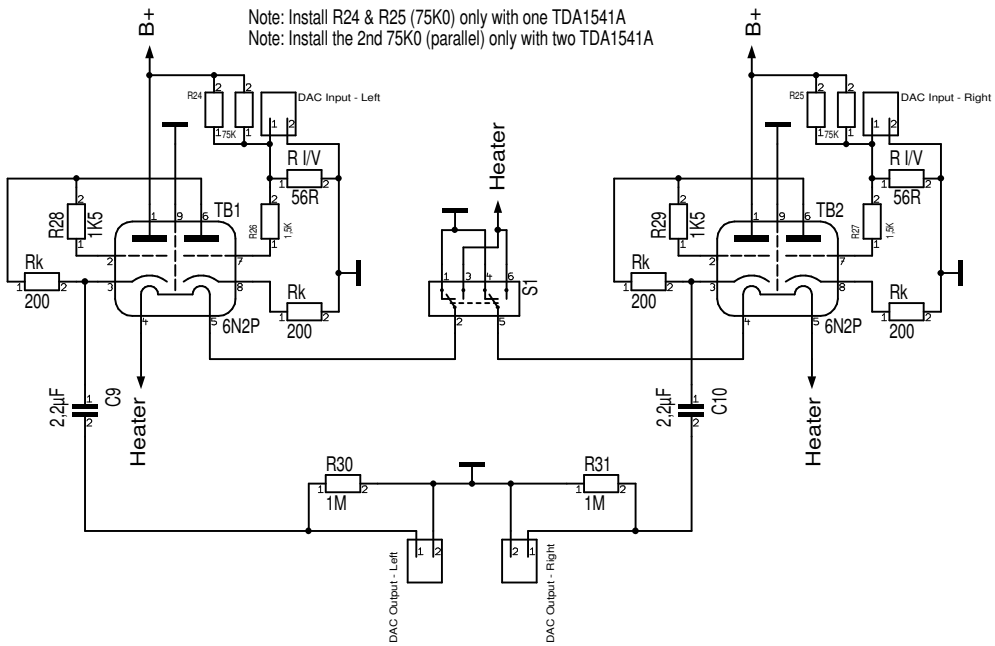
Note: Install R24 & R25 (75K0) only with one TDA1541A
Note: Install the 2nd 75K0 (parallel) only with two TDA1541A
B+
B+
R24
75K
DAC Input - Left
R25
75K
DAC Input - Right
R I/V
56R
Heater
R I/V
56R
R28
1K5
TB1
R26
1,5K
R29
1K5
TB2
R27
1,5K
Rk
200
Rk
200
S1
Rk
200
Rk
200
6N2P
6N2P
2,2µF
C9
Heater
2,2µF
C10
Heater
R30
1M
R31
1M
DAC Output - Left
DAC Output - Right