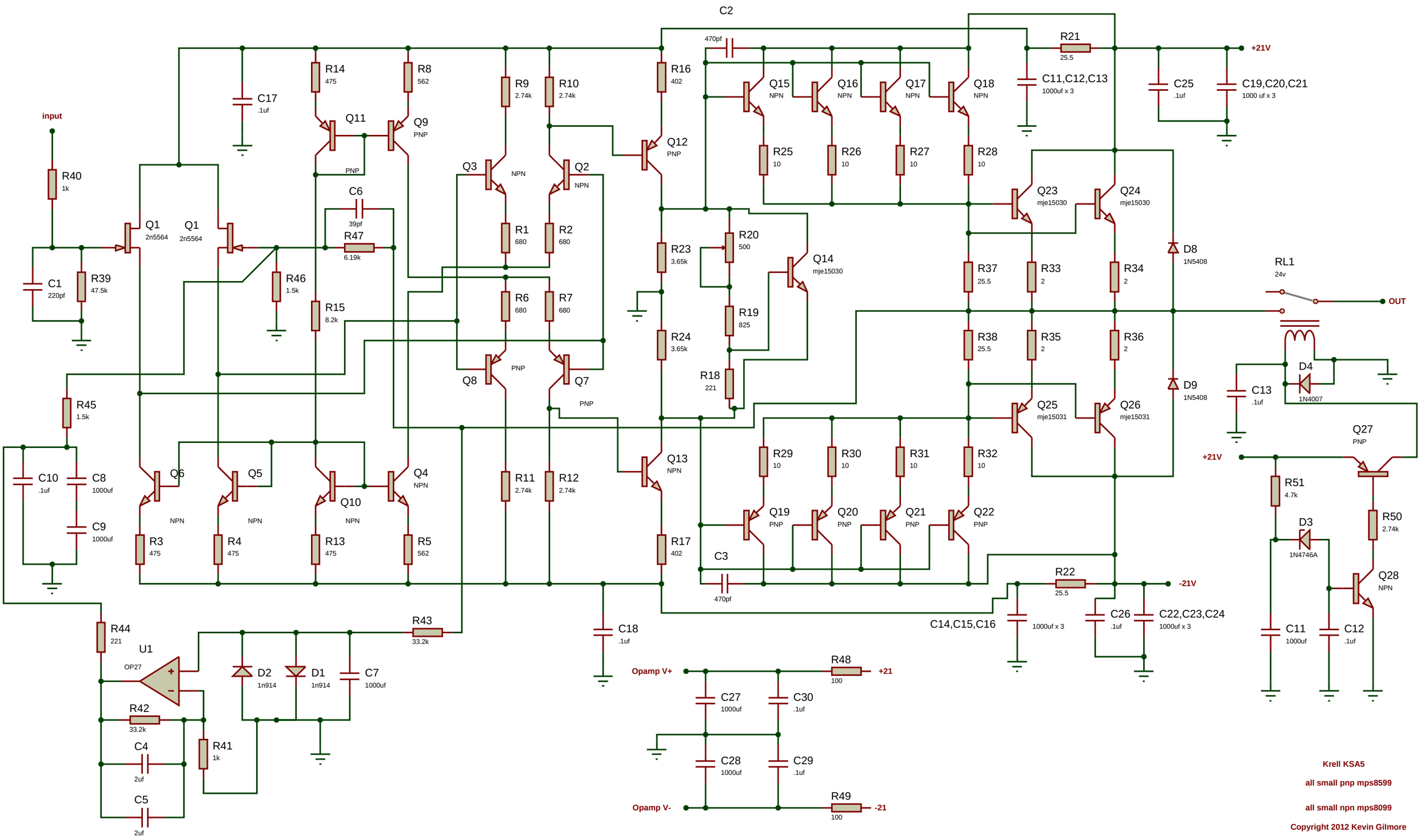

Krell KSA5

all small pnp mps8599

all small npn mps8099

Copyright 2012 Kevin Gilmore