18W TMB Schematic

www.dockeryamps.com

May 18, 2008

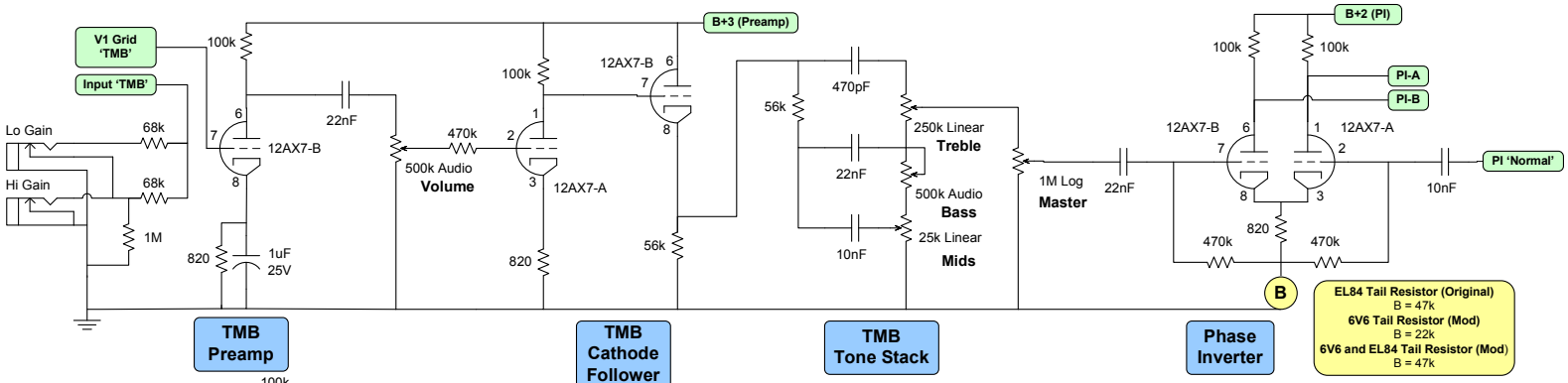

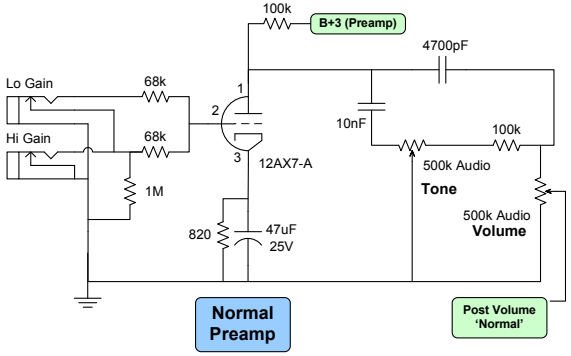

With Cascade Boost (MOD)
When enabled, it will cascade the normal channel into the TMB channel for more gain.

In this schematic, UP = Cascaded, DOWN = Normal

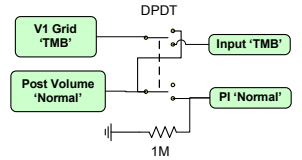

Without Cascade Boost (Original)

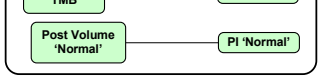

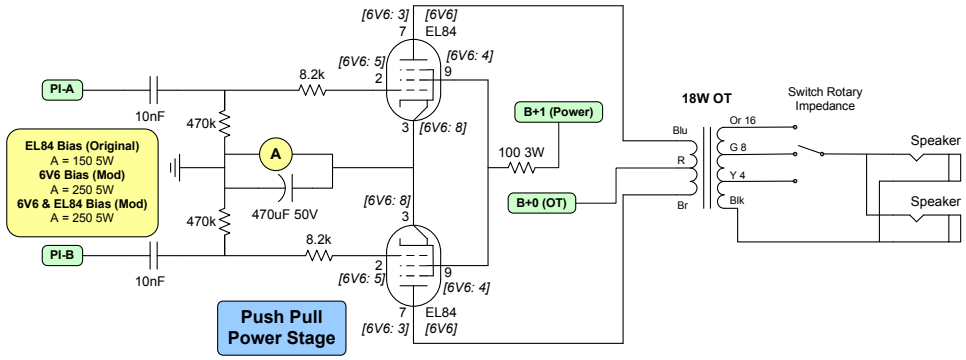

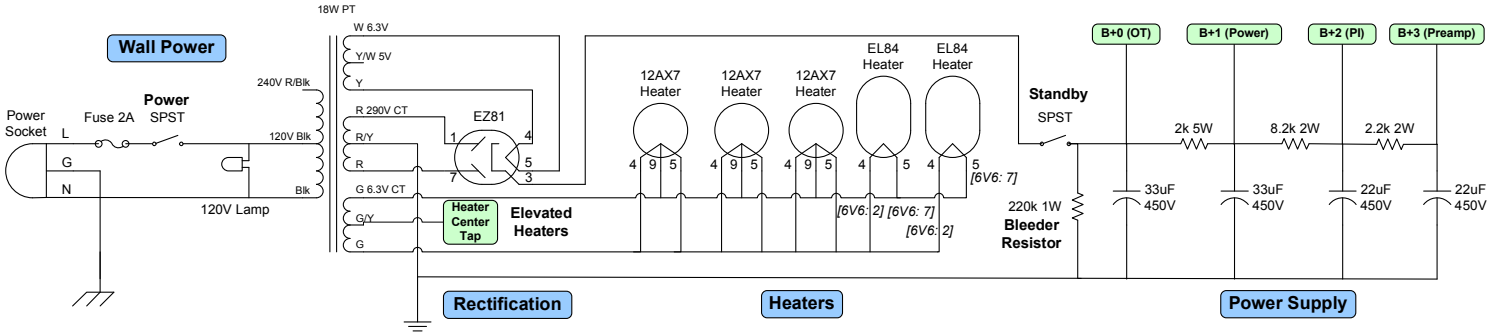

6V6 / EL84 Output Section Notes
- The layout is wired to enable switching between EL84s and 6V6s by just plugging in either 2 EL84s or 2 6V6s
- Do NOT put both EL84s and 6V6s in at the same time, put only one set in at a time
- If you want to have only EL84s wired up or only 6V6s wired up you can use this pin equivalency chart to wire accordingly

Pin Equivalency Chart
Pin 3 EL84 = Pin 8 6V6 = Cathode
Pin 9 EL84 = Pin 4 6V6 = Screen
Pin 7 EL84 = Pin 3 6V6 = Plate
Pin 2 EL84 = Pin 5 6V6 = Grid
Pin 4 & 5 EL84 = Pin 2 & 7 6V6 = Heaters