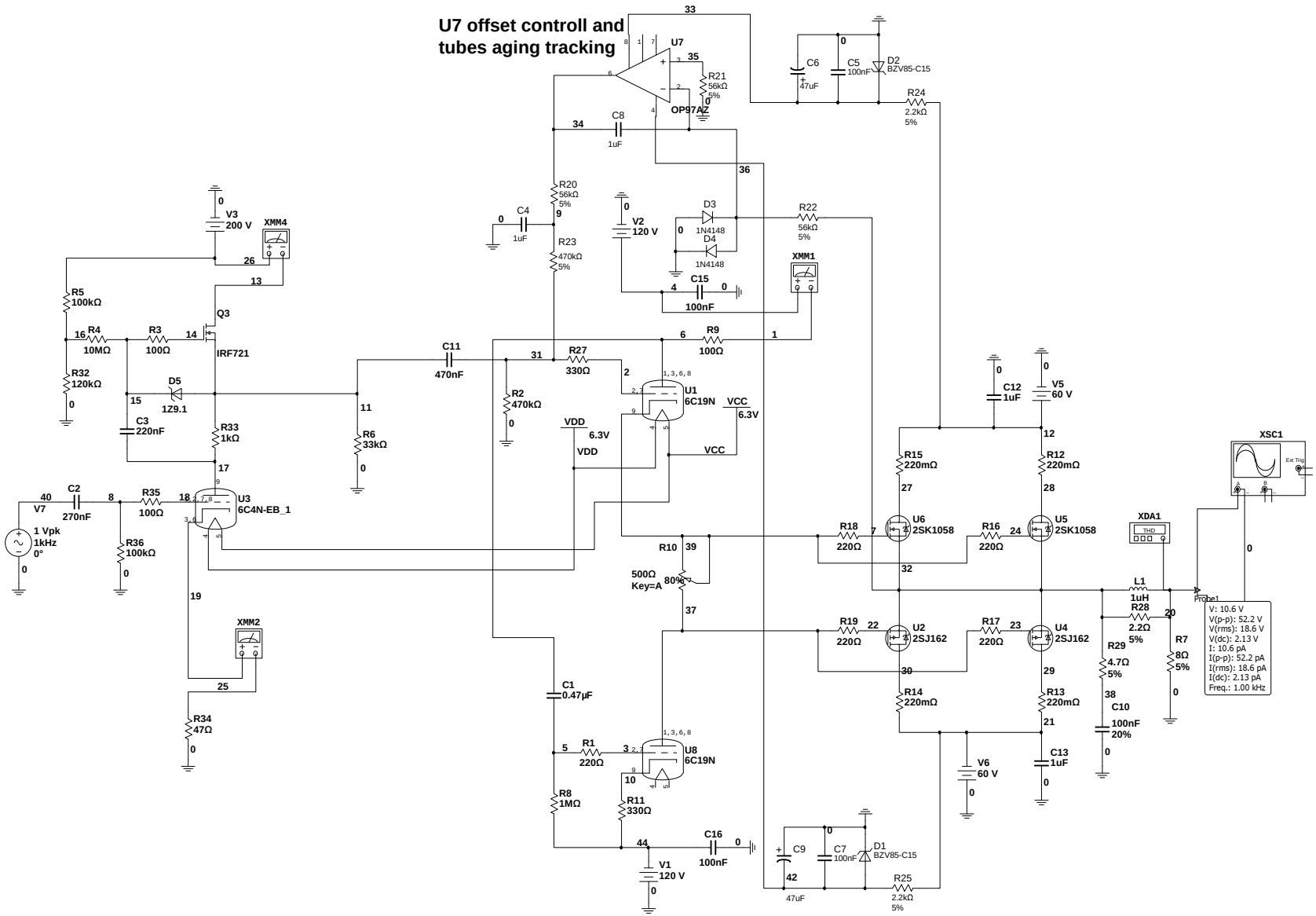
U7 offset controll and tubes aging tracking
U7
OP97AZ
R21 56kΩ 5%
C8 1uF
R20 56kΩ 5%
C4 1uF
R23 470kΩ 5%
V2 120 V
D3 1N4148
D4 1N4148
R22 56kΩ 5%
C15 100nF
XMM1
C6 47uF
C5 100nF
D2 BZV85-C15
R24 2.2kΩ 5%
V3 200 V
XMM4
R5 100kΩ
R4 10MΩ
R3 100Ω
Q3 IRF721
R32 120kΩ
D5 1Z9.1
C3 220nF
R33 1kΩ
C11 470nF
R27 330Ω
R9 100Ω
R2 470kΩ
U1 6C19N
VCC 6.3V
VDD 6.3V
R6 33kΩ
C12 1uF
V5 60 V
R15 220mΩ
R12 220mΩ
U6 2SK1058
U5 2SK1058
R18 220Ω
R16 220Ω
XSC1
XDA1
THD
V7 1 Vpk 1kHz 0°
C2 270nF
R35 100Ω
U3 6C4N-EB_1
R36 100kΩ
R10 500Ω Key=A 80%
L1 1uH
R28 2.2Ω 5%
Probe1
V: 10.6 V
V(p-p): 52.2 V
V(rms): 18.6 V
V(dc): 2.13 V
I: 10.6 pA
I(p-p): 52.2 pA
I(rms): 18.6 pA
I(dc): 2.13 pA
Freq.: 1.00 kHz
R19 220Ω
U2 2SJ162
R17 220Ω
U4 2SJ162
R7 8Ω 5%
R29 4.7Ω 5%
C10 100nF 20%
XMM2
R34 47Ω
C1 0.47µF
R1 220Ω
U8 6C19N
R8 1MΩ
R11 330Ω
C16 100nF
V1 120 V
R14 220mΩ
R13 220mΩ
C13 1uF
V6 60 V
C9 47uF
C7 100nF
D1 BZV85-C15
R25 2.2kΩ 5%